Ductility requirements

What are the conditions
so we can rely on ductility?

How much ductility is required?

Ductility requirements

Ductility requirements for

Moment connections
in
statically indetermined structures

Ad Leijten

Ductility requirements

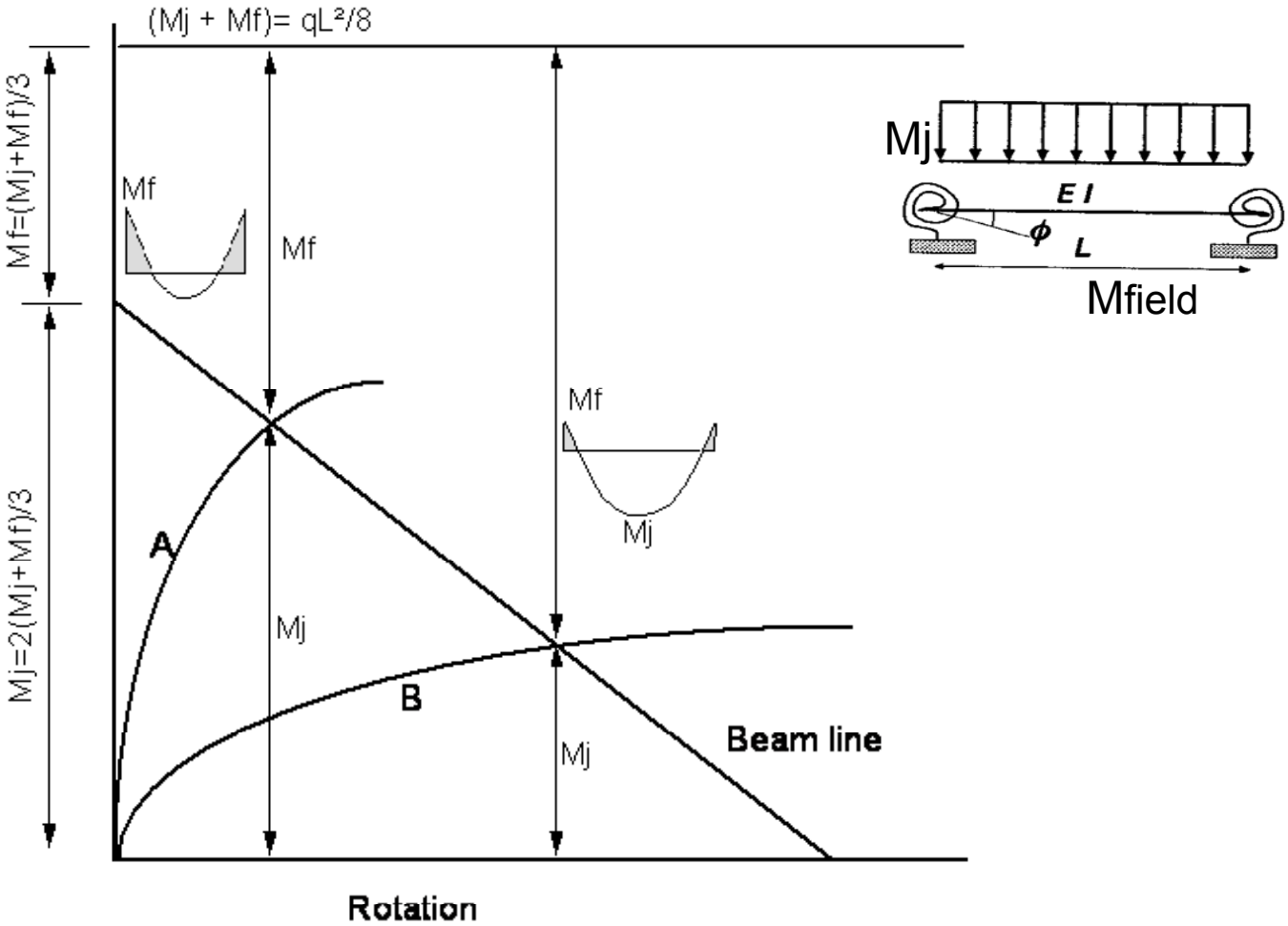

Ductility requirements

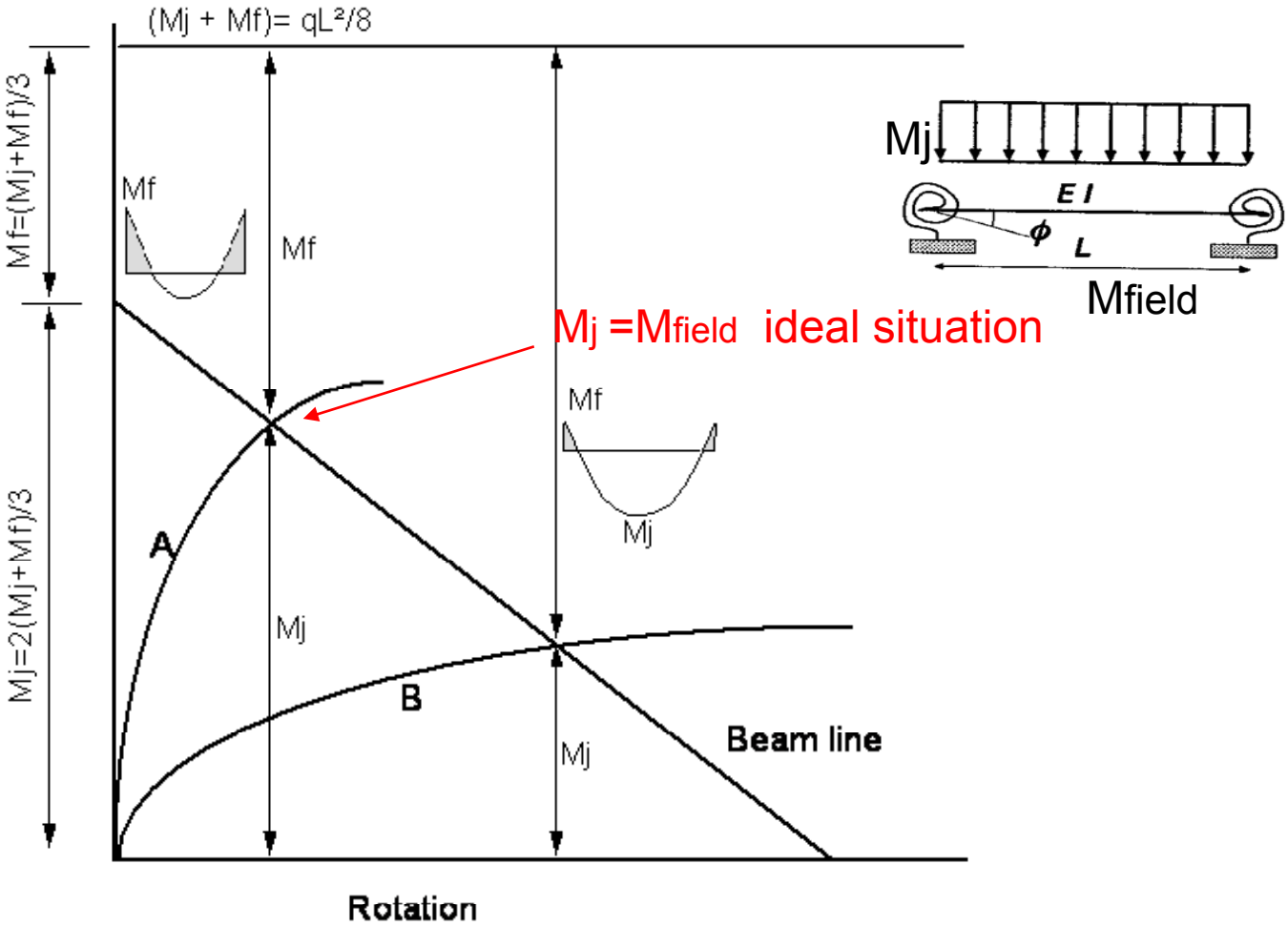

Ad Leijten

TU

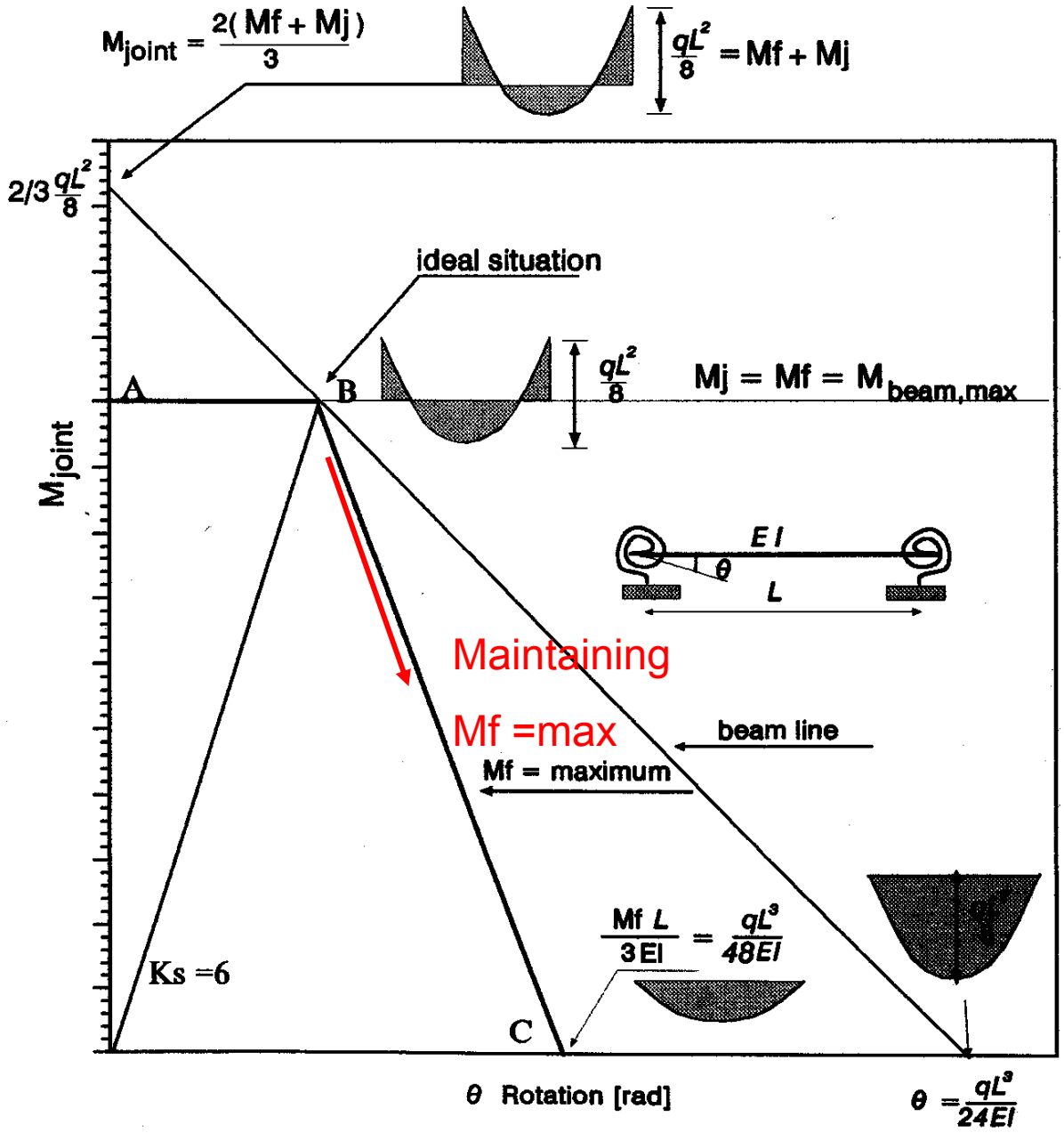
$M_{joint} = \frac{2(Mf + Mj)}{3}$
$\frac{qL^2}{8} = Mf + Mj$
$2/3\frac{qL^2}{8}$
ideal situation
A
B
$\frac{qL^2}{8}$
$Mj = Mf = M_{beam,max}$
M_{joint}
E I
θ
L
Maintaining
Mf =max
beam line
Mf = maximum
$\frac{Mf\,L}{3EI} = \frac{qL^3}{48EI}$
Ks =6
C
θ Rotation [rad]
$\theta = \frac{qL^3}{24EI}$

TU

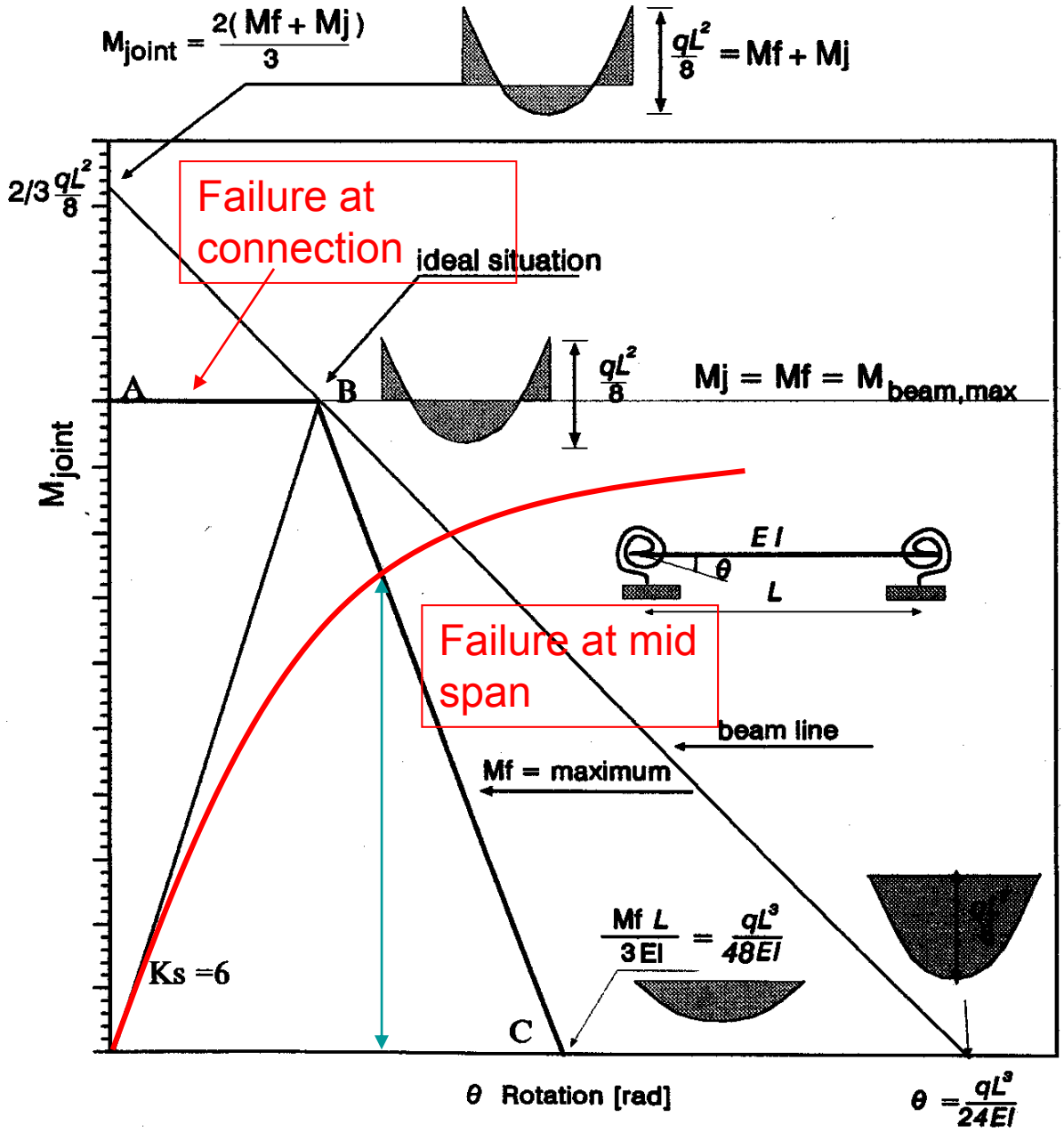
$M_{joint} = \frac{2(Mf + Mj)}{3}$
$\frac{qL^2}{8} = Mf + Mj$
$2/3 \frac{qL^2}{8}$
Failure at connection
ideal situation
A
B
$\frac{qL^2}{8}$
$Mj = Mf = M_{beam,max}$
M_{joint}
EI
θ
L
Failure at mid span
beam line
Mf = maximum
$\frac{Mf\,L}{3EI} = \frac{qL^3}{48EI}$
Ks =6
C
θ Rotation [rad]
$\theta = \frac{qL^3}{24EI}$

TU

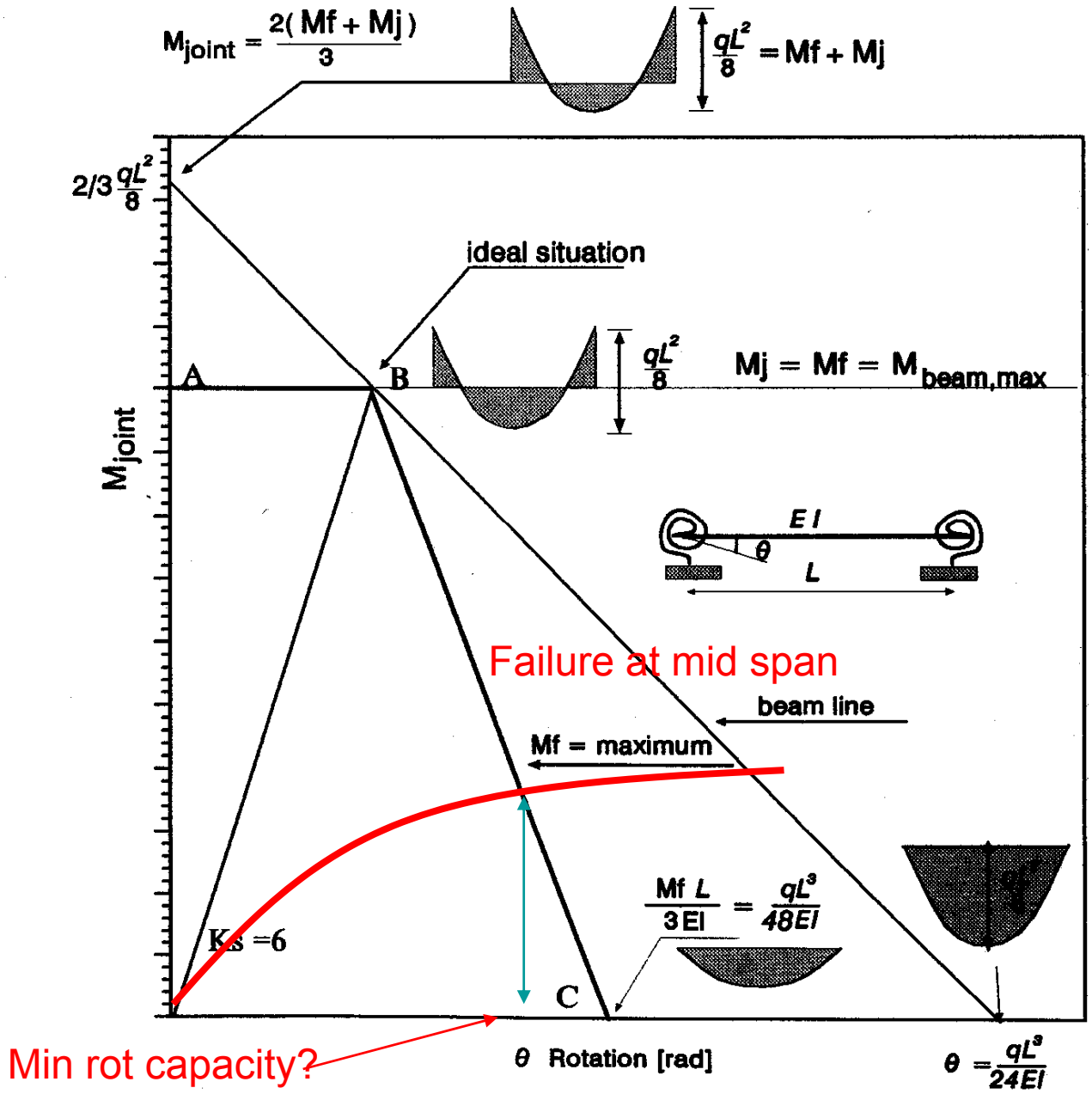

Min rot capacity?

Ductility requirements

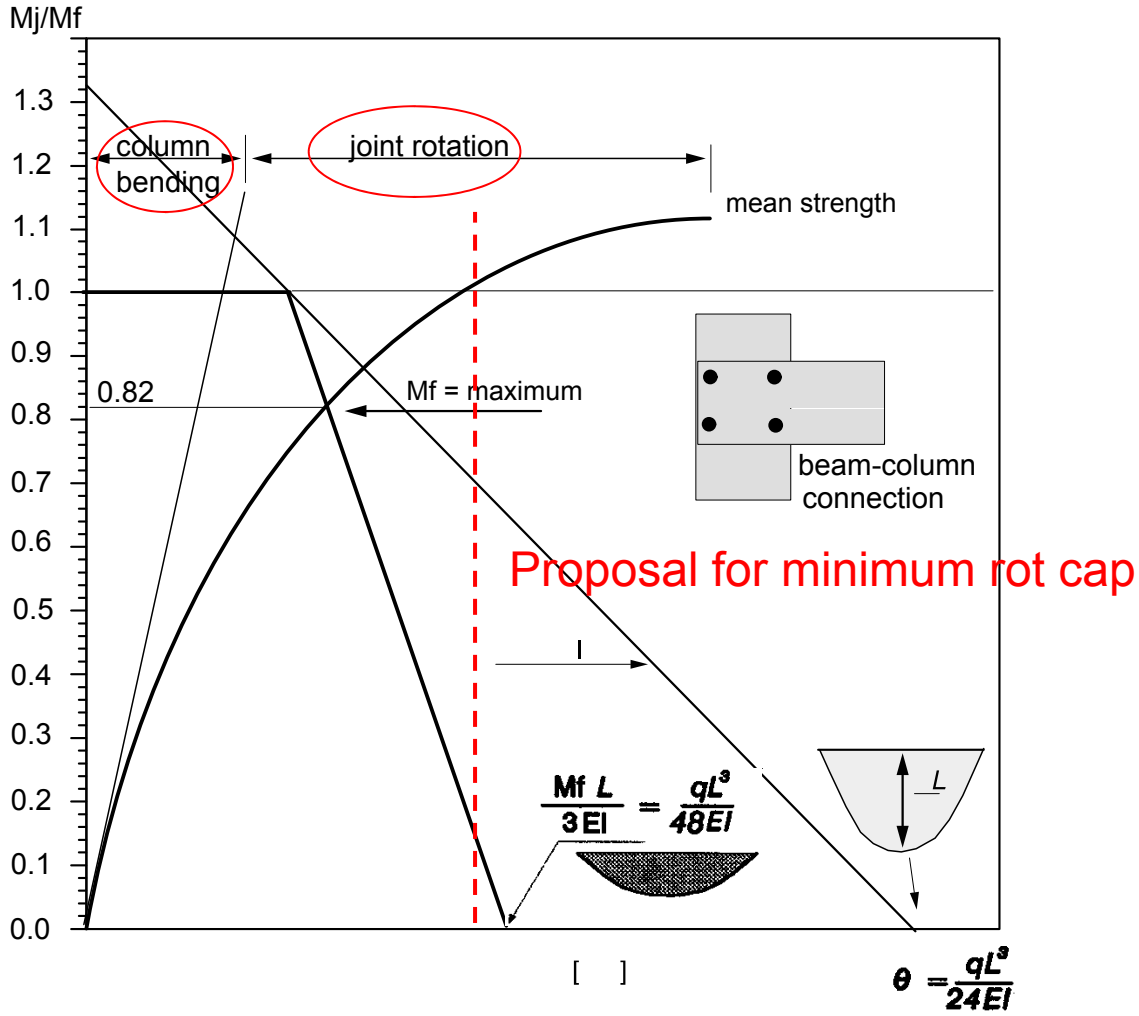

Ad Leijten

Ductility requirements

How much is that min rotation capacity

Example:

Two hinged portal frame

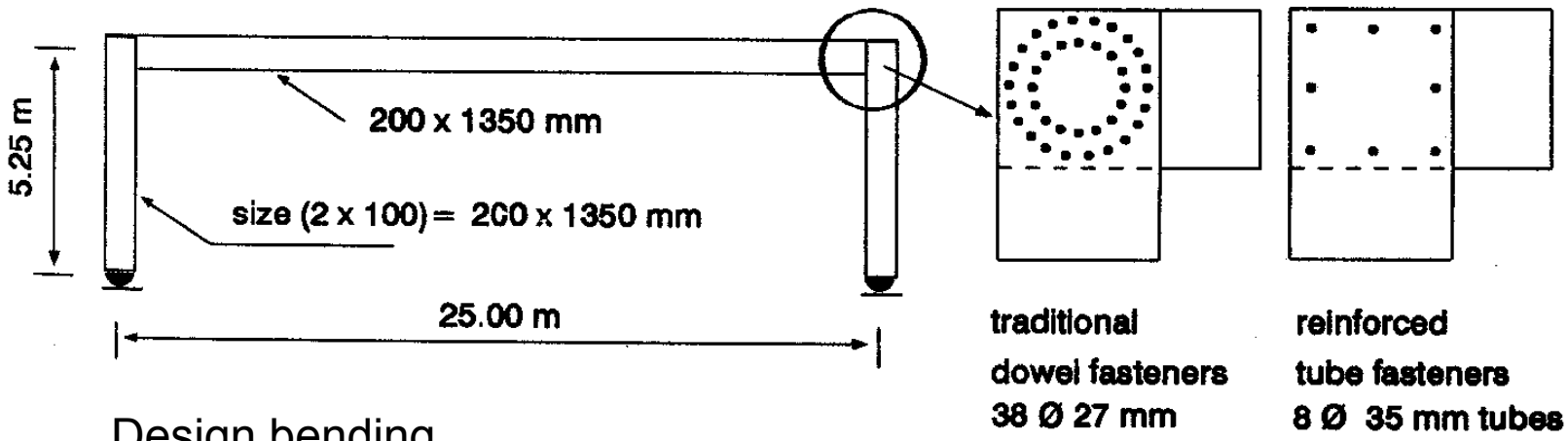

Design bending strength 21.2 MPa

Ductility requirements

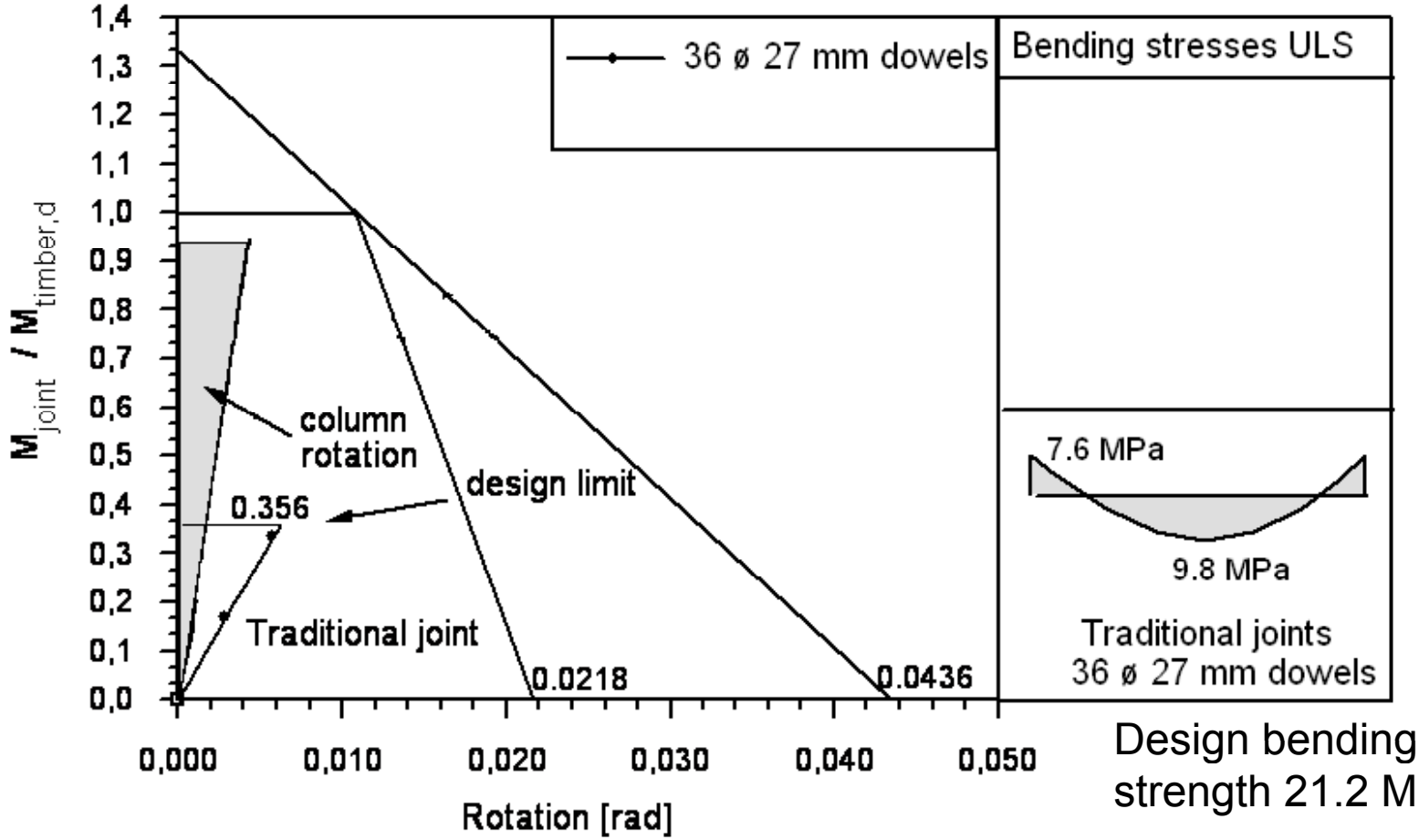

Design bending strength 21.2 MPa

Ductility requirements

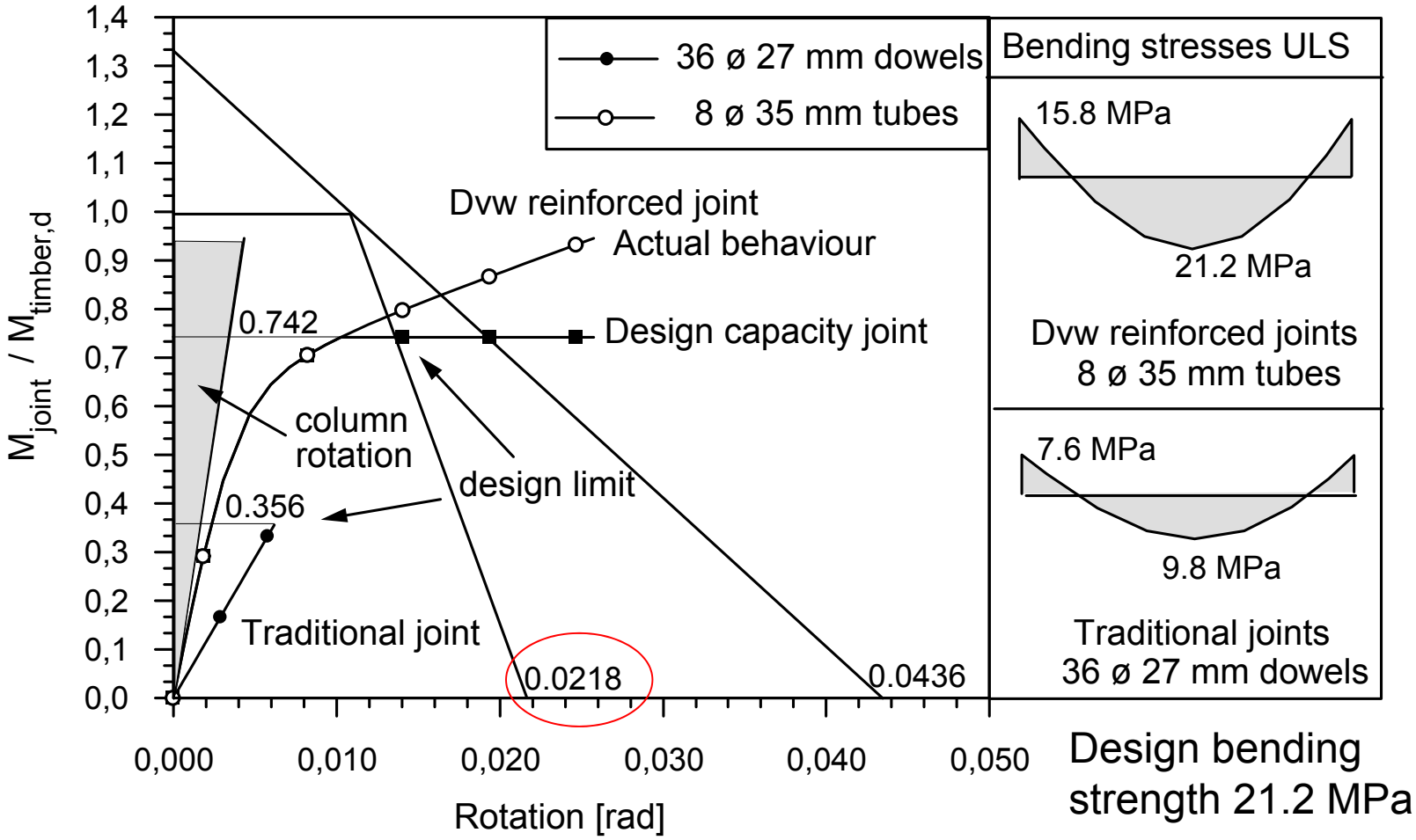

Design bending strength 21.2 MPa

Ductility requirements

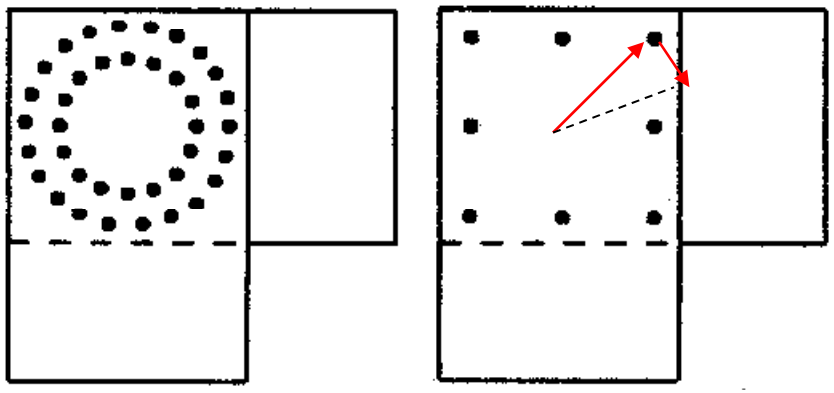

traditional
dowel fasteners
38 Ø 27 mm

reinforced
tube fasteners
8 Ø 35 mm tubes

0.0218 rad → minimum fastener displacement:

For dowel connection 12 mm → achievable ?

For tube connection 17mm → no problem