ASSESSMENT OF FAILURES AND MALFUNCTIONS

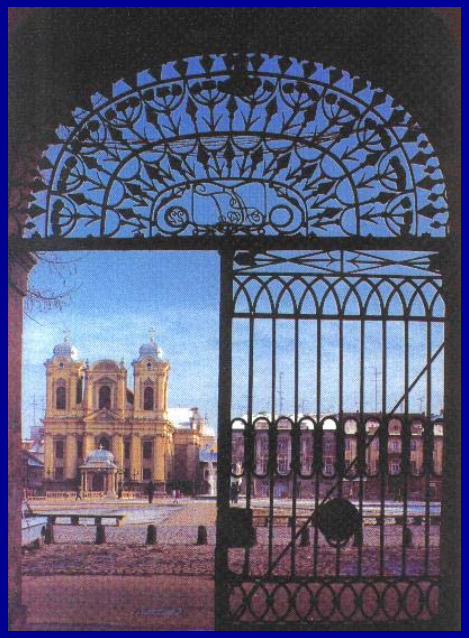

Prof. dr. ing. Radu BĂNCILĂ
Assoc.Prof.dr.ing. Edward PETZEK
"Politehnica" University of Timisoara

Main Aspects:

No structure is build to last an eternity.

The first step in direction robustness of structures, is the assessment necessity of defects, malfunctions and failures; in the following, this aspect will be exemplified in the field of steel bridges.

The main function of a bridge is to carry vehicular or other traffic over a crossing, safety and economically. A bridge should be designed also aesthetically.

Introduction:

ACCIDENTS, MALFUNCTIONS & FAILURES.

Accidents, malfunctions and failures can result from different causes, like: material failure, human error or natural perils and they have negative effects on people and environment.

It is very useful to identify possible malfunctions during the elaboration of the project.

For important objectives scenarios can be developed, to analyze possible incidents in the context of site specific locations or operating conditions.

Possible project errors are:

- Inadequate choice of material properties;
- Unpredicted (change in) operating conditions;
- Environmental, like soil settlements, erosion and slope failure, flooding, extreme weather conditions;
- Traffic and transportation accidents and equipment failure.

DEFECTS, MALFUNCTIONS & FAILURES IN BRIDGES:

- Romania has a railway network of about 14300 km. From the total number of 4290 bridges approximately **30%** are welded structures.

- There is a big variety of structural types. Most of the bridges are simple supported girders (rarely continuous); depending on the cross section there are deck or trough bridges. The majority of them are plate or truss girder bridges; other constructive systems like twin girders or embedded girders can also be noticed.

DEFECTS, MALFUNCTIONS & FAILURES IN BRIDGES:

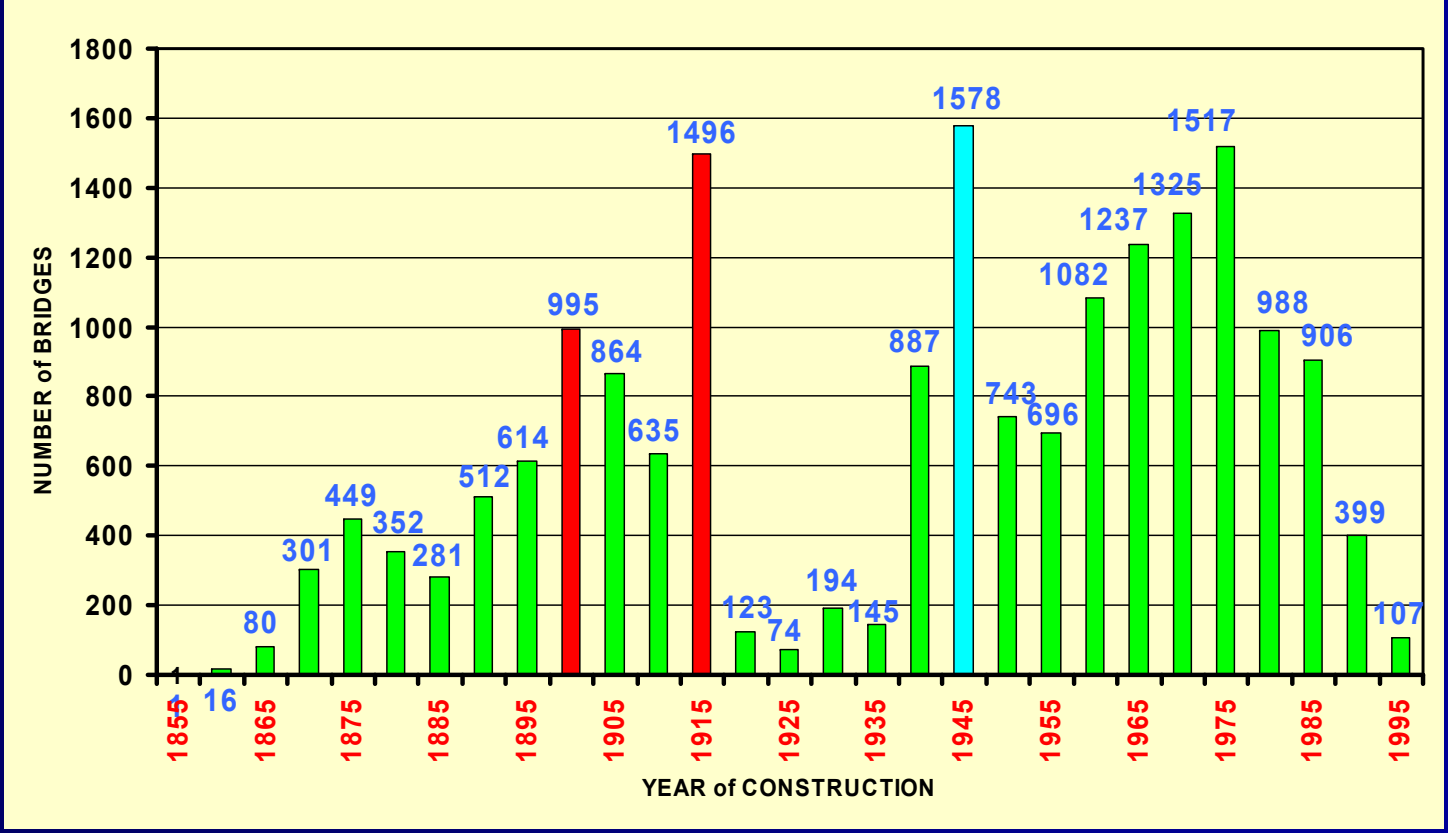

Total number of railway bridges	Older than 100 years		Steel bridges	L > 10 m	Riveted structures	Welded structures
18 614	3 601	**19 %**	4 289	4 155	3 201	1 088

DEFECTS, MALFUNCTIONS & FAILURES IN BRIDGES:

- A continuous maintenance, which generally must increase in time, is important in order to assure the safety in operation of the existing structures.

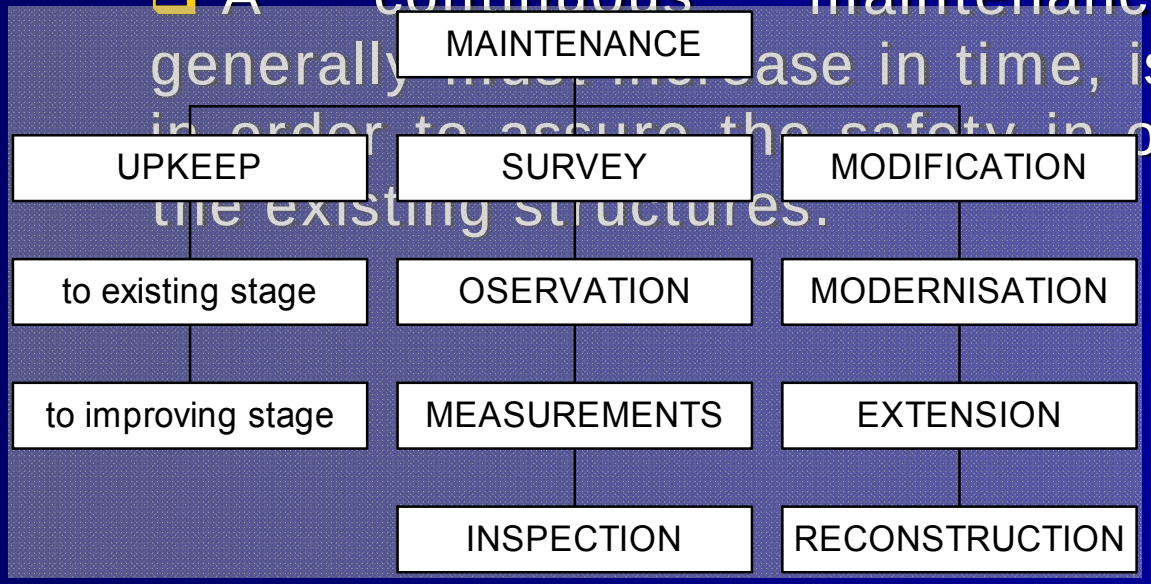

Careful inspection of the structure is the most important aspect in evaluating the safety of the bridge.

DEFECTS, MALFUNCTIONS & FAILURES IN BRIDGES:

The main non destructive methods for bridge inspection

- ✓ *visual inspection* – includes microscopes, mirrors, portable video cameras, robotic crawlers; is very useful in case of surface cracks;

DEFECTS, MALFUNCTIONS & FAILURES IN BRIDGES:

✓ *magnetic particle inspection* – very simple method, but can be applied just in case of ferromagnetic materials (not for austenitic steels). The method consists in the magnetization of the high stress elements or critical details and indicates directly the surface discontinuity through forming a distorted magnetic field, which can be detected under proper lighting conditions;

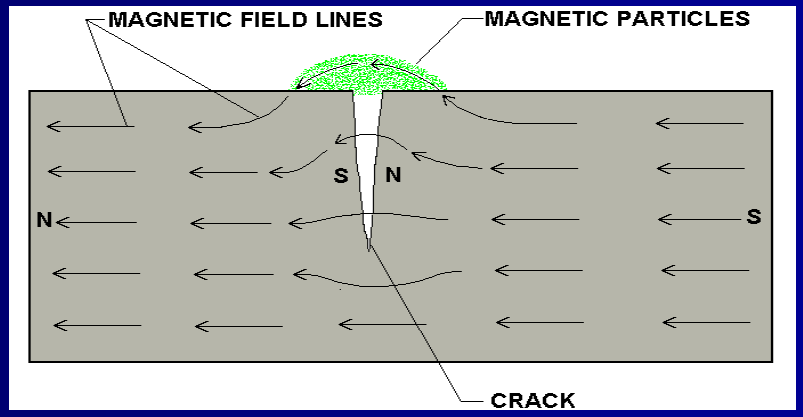

DEFECTS, MALFUNCTIONS & FAILURES IN BRIDGES:

✓ *liquid penetration inspection* – is a simple method including the qualification of the personnel; it uses penetrate liquids with fluorescent pigment and UV – light in order to indicate the surface defections;

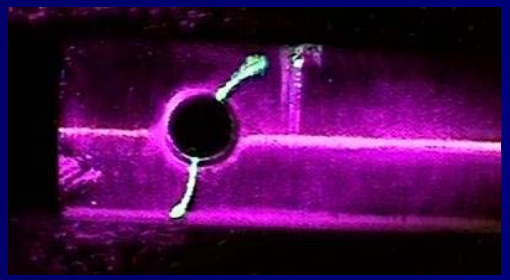

✓ *radiographic inspection* – the method is applied for hidden defects and it uses Gamma or Röntgen radiation. The interpretation of the radiographic images should be done by experts, otherwise defects could be ignored;

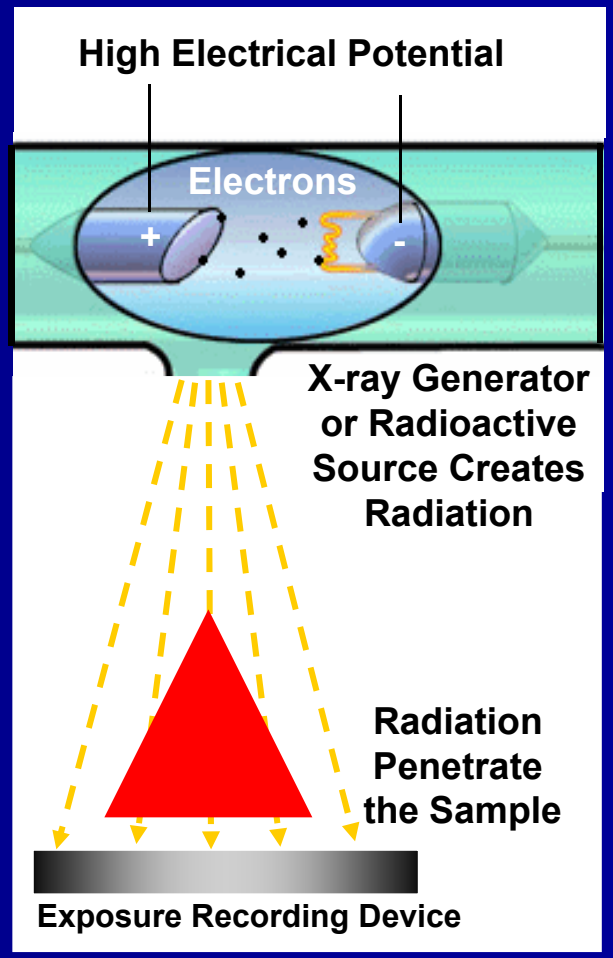

DEFECTS, MALFUNCTIONS & FAILURES IN BRIDGES:

✓ *ultrasonic inspection* – this testing is used for flaws and cracks in the material thickness, on the surface or hidden defects; highly qualified personnel is needed. This method can not be used for elements made of multiple plates (riveted sections).

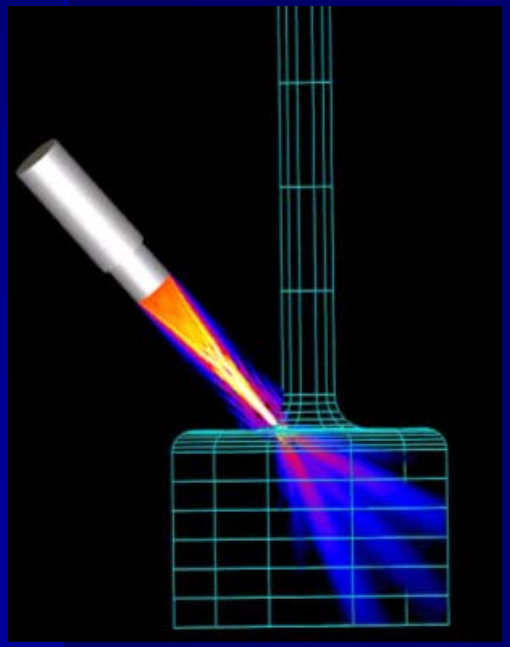

✓ *Eddy Current testing* – this method can detect surface defects but can also be used for thickness inspection.

OVERALL EXAMINATION OF A LARGE NUMBER OF BRIDGES → DEFECTS

The **defects**

- are widespread,
- a heterogeneous character from the point of view of location, development and development tendency;
- their amplification was also due to the climate and polluting factors

Statistically, in 283 from among 1088 welded bridges (and in 356 from among 3201 steel riveted bridges) cracks were detected and repaired.

TYPICAL DEFECTS IN RAILWAY BRIDGES

Element	CRACK	REPAIR
0	1	2
Main girder	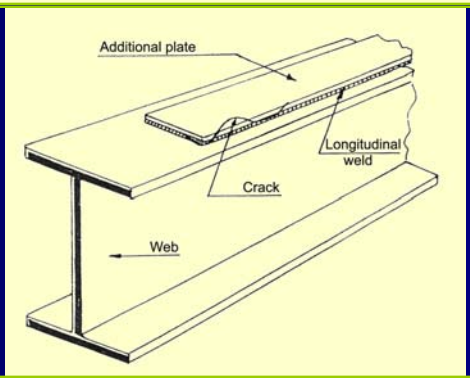	⇨ Grinding ⇨ New additional plate ⇨ Observation
Main girder	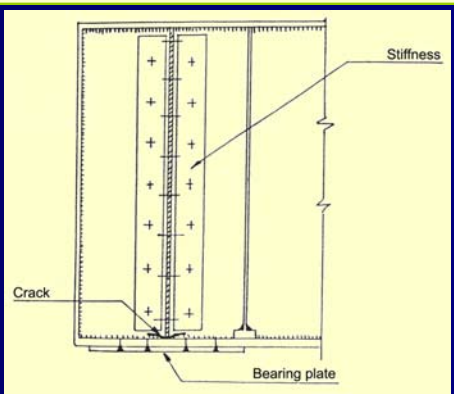	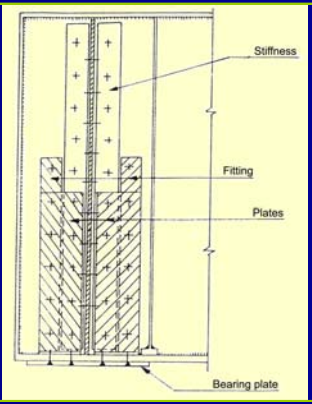

Element	CRACK	REPAIR
0	1	2
Stringer	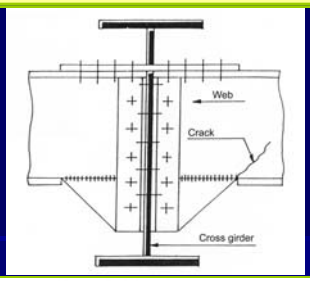	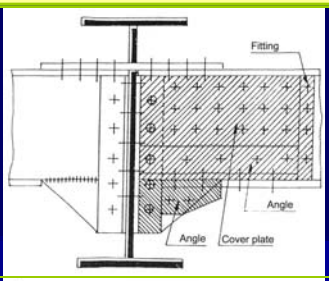
Stringer	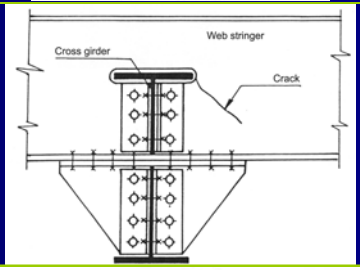	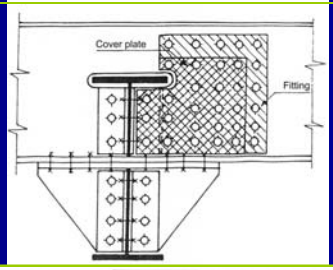
Stringer	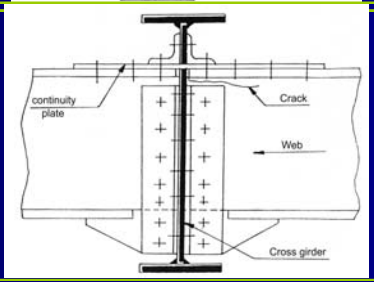	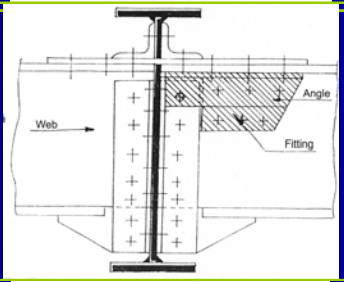
Stringer	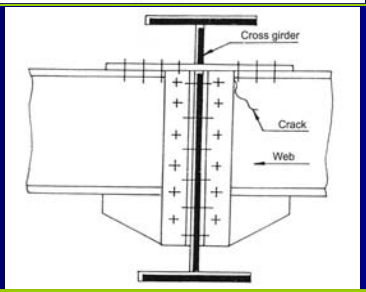	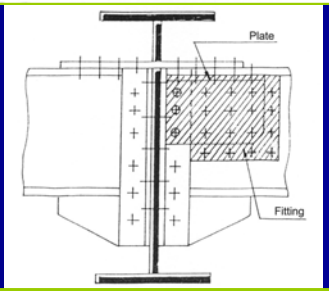

Cross girder	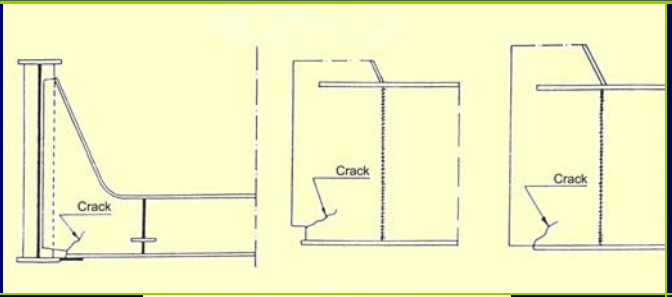	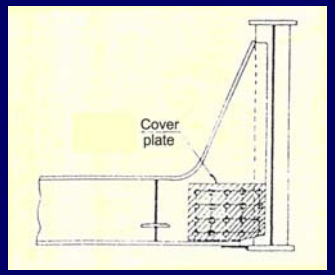
Cross girder	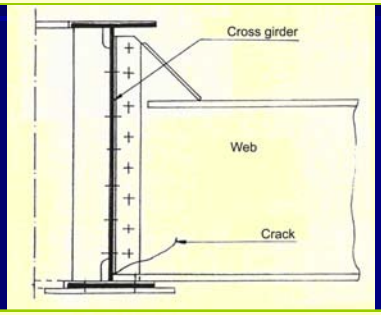	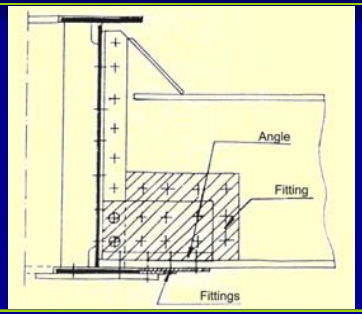
Ortho-tropic deck	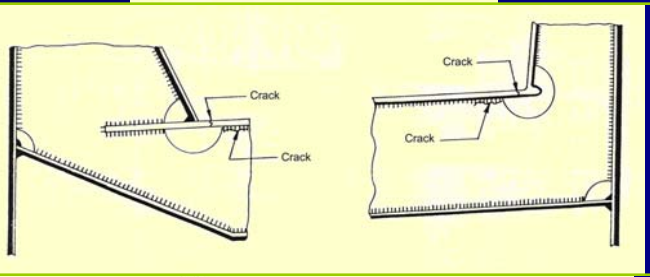	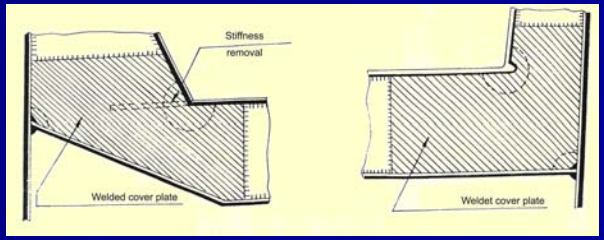
Ortho-tropic deck	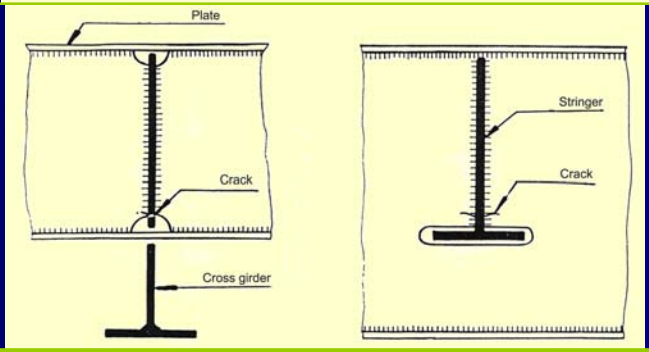	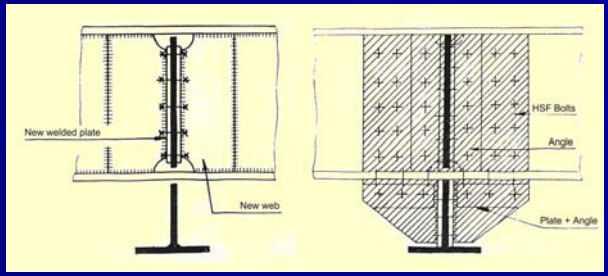

Twin girders	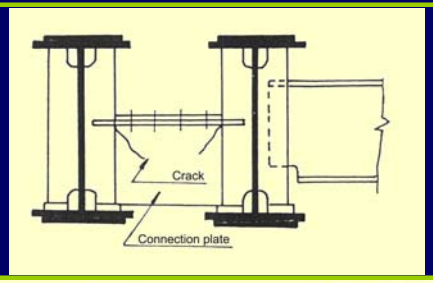	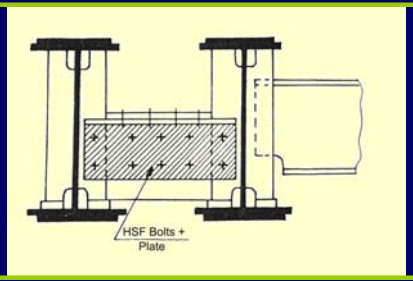
Twin girders	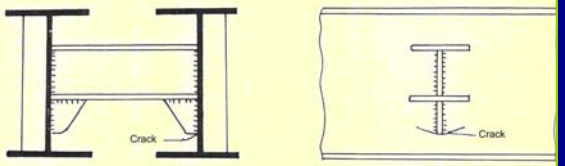	⇨ Hole at the end of the crack ⇨ Replacement
Wind bracing	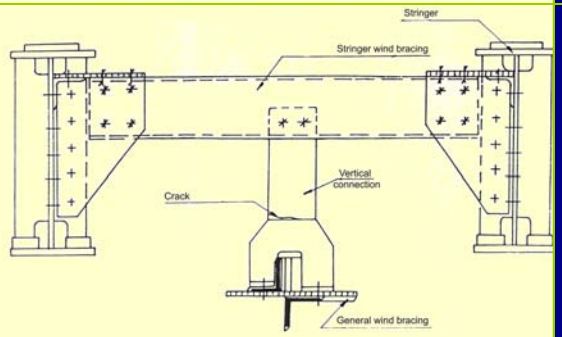	⇨ Replacement of the vertical element
Wind bracing	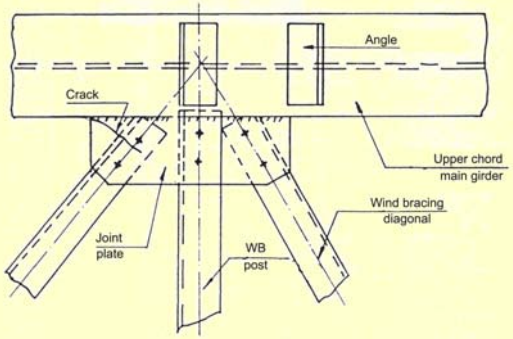	⇨ Replacement of the gusset

The new Romanian Danube bridges built in the zone Feteşti – Cernavodă were built in the period 1978 – 1987

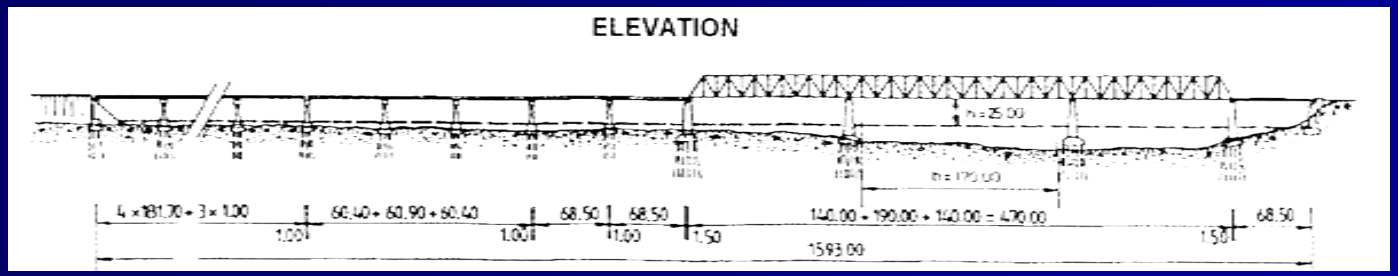

PROBLEMS AND DIFFICULTIES

Steel sheet exfoliation.

During the manufacturing of different subassemblies, a number of exfoliations (lamellar tearing) were noticed. Ultrasound checkups were immediately initiated.

The exfoliations were on large areas, placed at 4 - 6 mm depth.

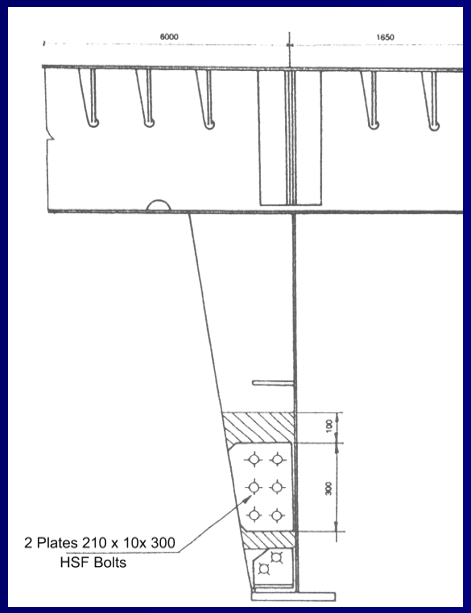

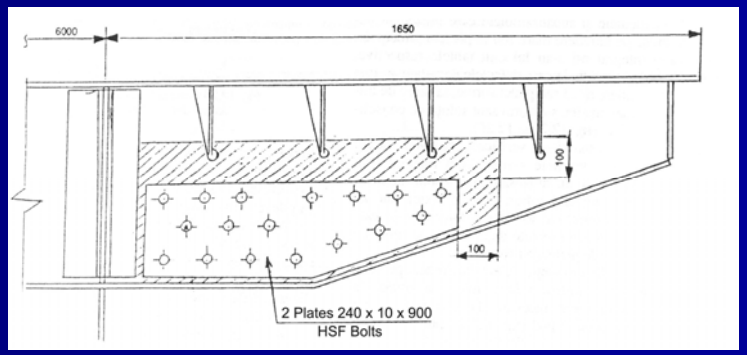

Elements → replaced or strengthened !

Evolution of the local defects → fatigue tests were carried out → bridge subassembly

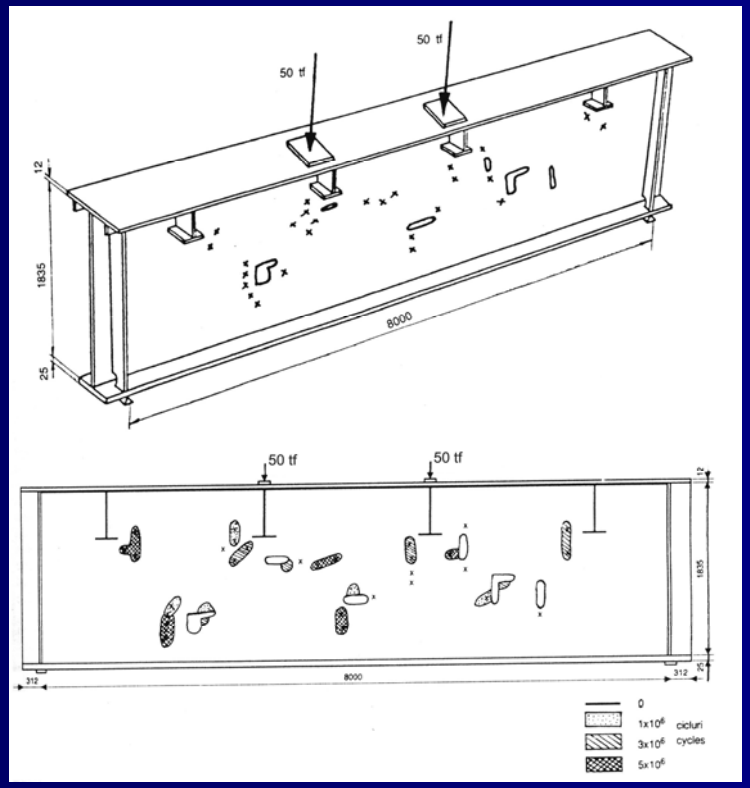

Fatigue tests on subassemblies with defects. Evolution of discontinuities on ultrasound testing

Strengthened elements were included in a systematic control program.

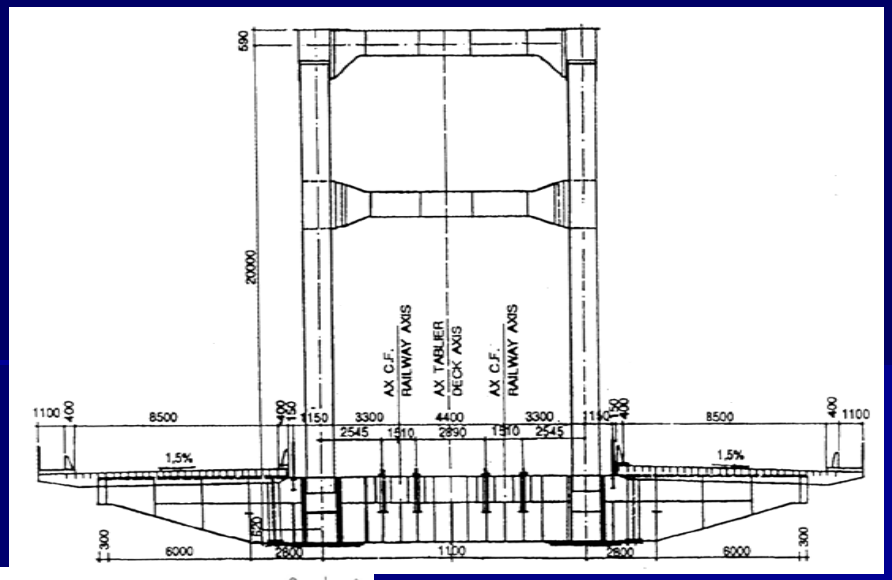

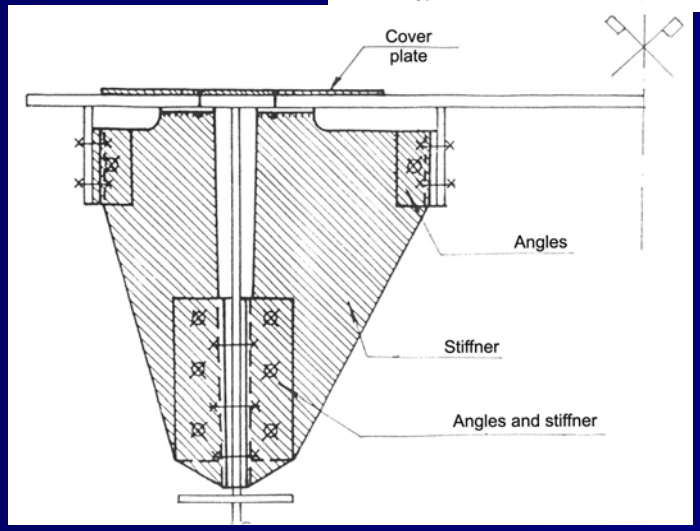

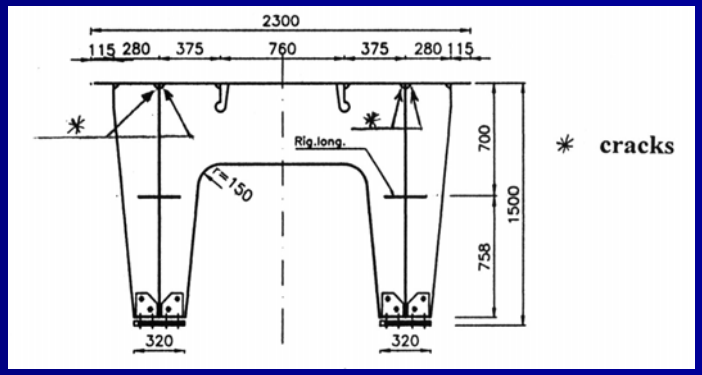

In the railway stringers cracks were detected.
Cause → direct placement of the track on the steel deck; torsional stresses (eccentricity of the rail) appeared.
Repair → difficult and at a high cost

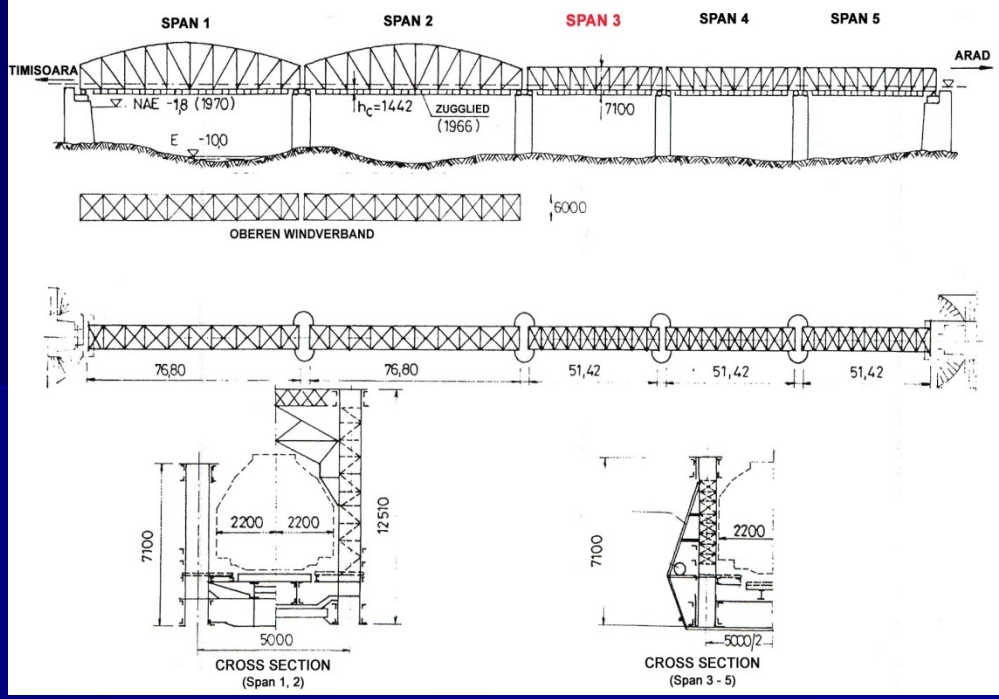
SPAN 1
SPAN 2
SPAN 3
SPAN 4
SPAN 5
TIMISOARA
ARAD
NAE -1,8 (1970)
E -10,0
h_c=1442
ZUGGLIED
(1966)
7100
6000
OBEREN WINDVERBAND
76,80
76,80
51,42
51,42
51,42
7100
2200
2200
12510
5000
CROSS SECTION
(Span 1, 2)
7100
2200
5000/2
CROSS SECTION
(Span 3 - 5)

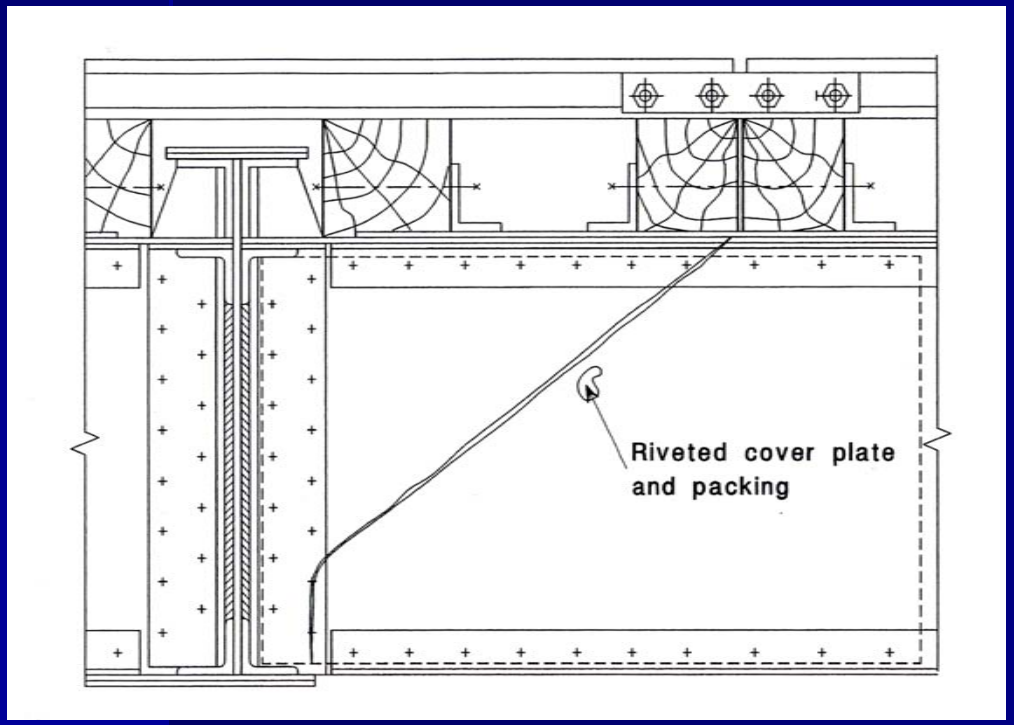
Riveted cover plate
and packing

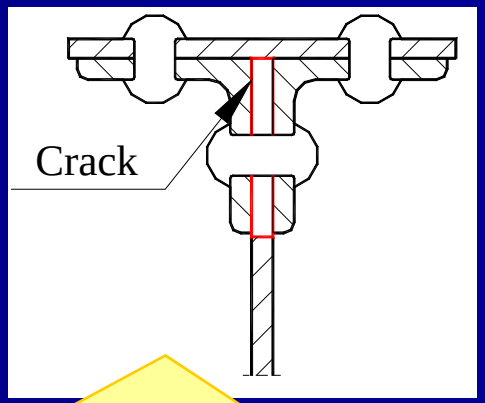
Crack

Earthquakes and their influence on the bridges

Date Year l:z	MAGNITUDE Gutenberg Richter
1977 March 04	5,5 7,2
1986 August 30	7,0
1990 May 30	6,7
1990 May 31	6,1

They caused some damages to the existing bridges, without affecting their bearing capacity, not even to the bridges built during the last century as it is the case of the old single line bridges crossing the Danube at Feteşti - Cernavodă.

The Danube bridges are included in a continuous surveillance process.

CONCLUSION

Minor failures are relatively frequent. But cracks can be detected in due time. For this reason, the technical level of the inspection staff, common sense and good practice are very important. To prevent all failures is not humanly possible, but the lesson of each failure must be known by all.

PRESENT BRIDGE VERIFICATION (Methodology)

STEP 1: estimation of the loading capacity of the structure based on a detailed inspection; analysis of drawings, inspection reports, repairs, reinforcements, analysis of the general behaviour of the bridge (displacements, vibrations, corrosion, cracks). In this phase the stresses in the structure can be calculated with the usually simplified hypothesis;

STEP 2: the accurate determination of the stresses in the structure and of the remaining safety of the elements. This phase includes: tests on materials, computer aided analysis of the space structure, remaining safety calculated on the base of the real time - stress history;

STEP 3: in situ static and dynamic tests.

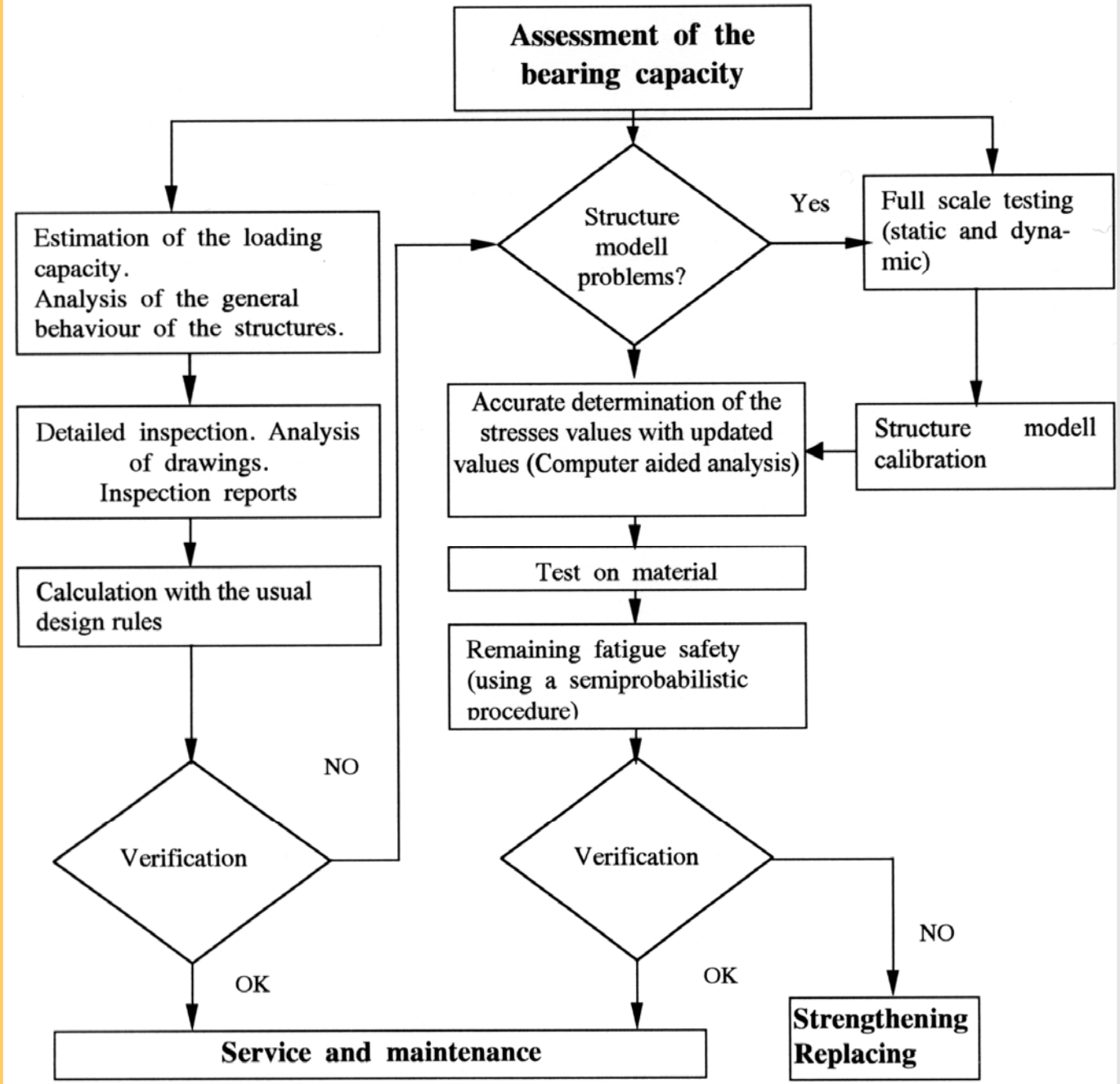
Assessment of the bearing capacity
Estimation of the loading capacity. Analysis of the general behaviour of the structures.
Detailed inspection. Analysis of drawings. Inspection reports
Calculation with the usual design rules
Verification
NO
OK
Structure modell problems?
Yes
Full scale testing (static and dyna-mic)
Structure modell calibration
Accurate determination of the stresses values with updated values (Computer aided analysis)
Test on material
Remaining fatigue safety (using a semiprobabilistic procedure)
Verification
NO
OK
Strengthening Replacing
Service and maintenance

The final result of calculation

$$D_p = \gamma_t^k \cdot S_p$$

- **The value Dp represents the actual (at present) design value of cumulative damage.**
- **Values of Dp greater than 1,0 indicate that there is theoretical no remaining service life; the initiation of cracks is possible.**
- **The safety concept of the German Rules was adopted.**

Obs. This calculation gives satisfactory results, as long as all stress ranges are above the constant amplitude fatigue limit $\Delta\sigma_D$.

As a function of expression (1), generally the following measures were taken: additional inspections speed and traffic reduction, strengthening or replacement of elements.

It must be emphasised that a strengthened structure is not a new one!

With the traditional static analysis (the space system is divided in plane elements), stresses are normally over-estimated.
In order to calibrate the static model measurements on the bridge are useful.
In many cases the structural capacity of these bridges is still satisfactory, as a result of a conservative design at the time.

The verification of more than **25 bridges** → general remarks:

✓ Materials, loadings and static models are defined in a deterministic way, the fatigue safety by semi probabilistic procedures.

✓ The characteristic values for the material resistance are often very conservative.

✓ Using the more realistic actual loads (instead of the loads given in different codes) the remaining fatigue life can be extended.

✓ The usual stress analysis is 10 – 25 % higher than the measured values in the structure; concerning the fatigue loads this means an extension of the expected remaining life by a factor of 1,5 – 2,5.

✓ Corrosion has an influence on the fatigue resistance curve.

Steel bridges are ductile structures; before failure will occur, the structure must have considerable deformations. Deformations are the best pre-warning system.

In practice two situations can be distinguished:

- **D < 0,8** the probability to detect cracks is very low. The inspection intervals (generally between 3 – 6 years) can be established on criteria independent of fatigue. Nevertheless, a special attention must be paid to critical details.
- **D ≥ 0,8** cracks are probable and possible. An in situ inspection and the analysis of critical details are strongly recommended. Also a fracture mechanics approach is necessary.

Fracture of mechanics as a complementary method for evaluating the behaviour of existing structures

The presence of cracks in structural elements modifies essentially their fracture behaviour. Fracture, assimilated in this case as crack dimensions growth process under external loadings, will be strongly influenced by the deformation capacity of material.

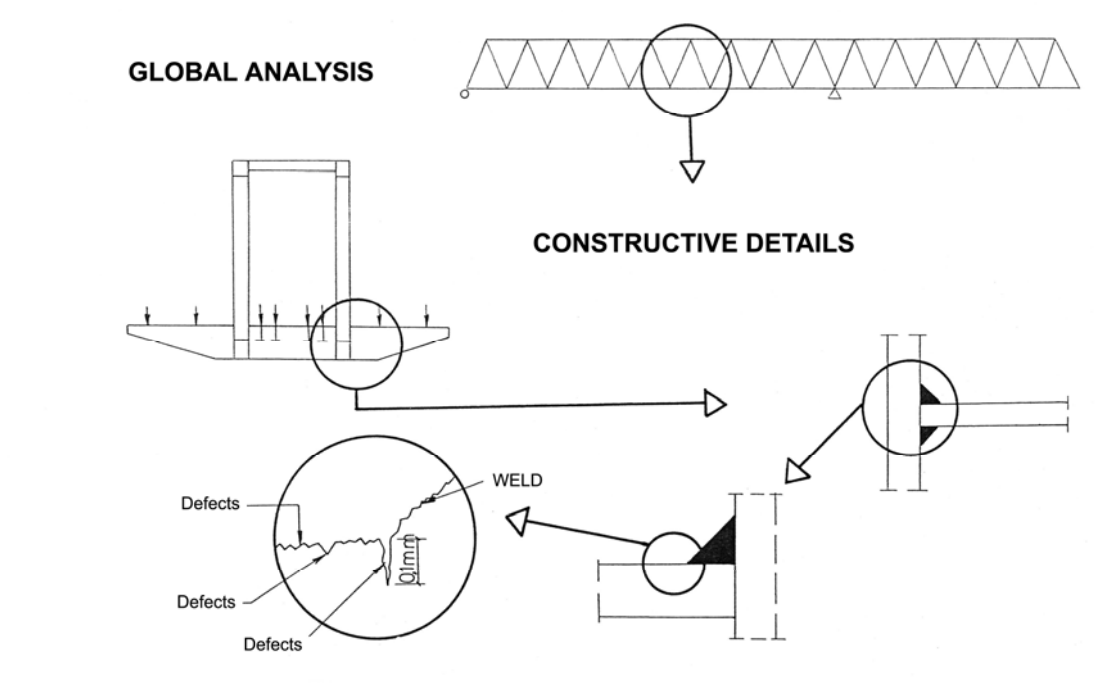

Fracture Mechanics versus Conventional Approaches

Conventional approach

STRESS → Critical stress Yield Strength

FM approach

STRESS → FRACTURE PROPERTY (FRACTURE TOUGHNESS)

DEFECT SIZE → FRACTURE PROPERTY (FRACTURE TOUGHNESS)

Fracture Mechanics Application

1. Use of fracture mechanics triangle
2. Testing is needed to obtain material properties

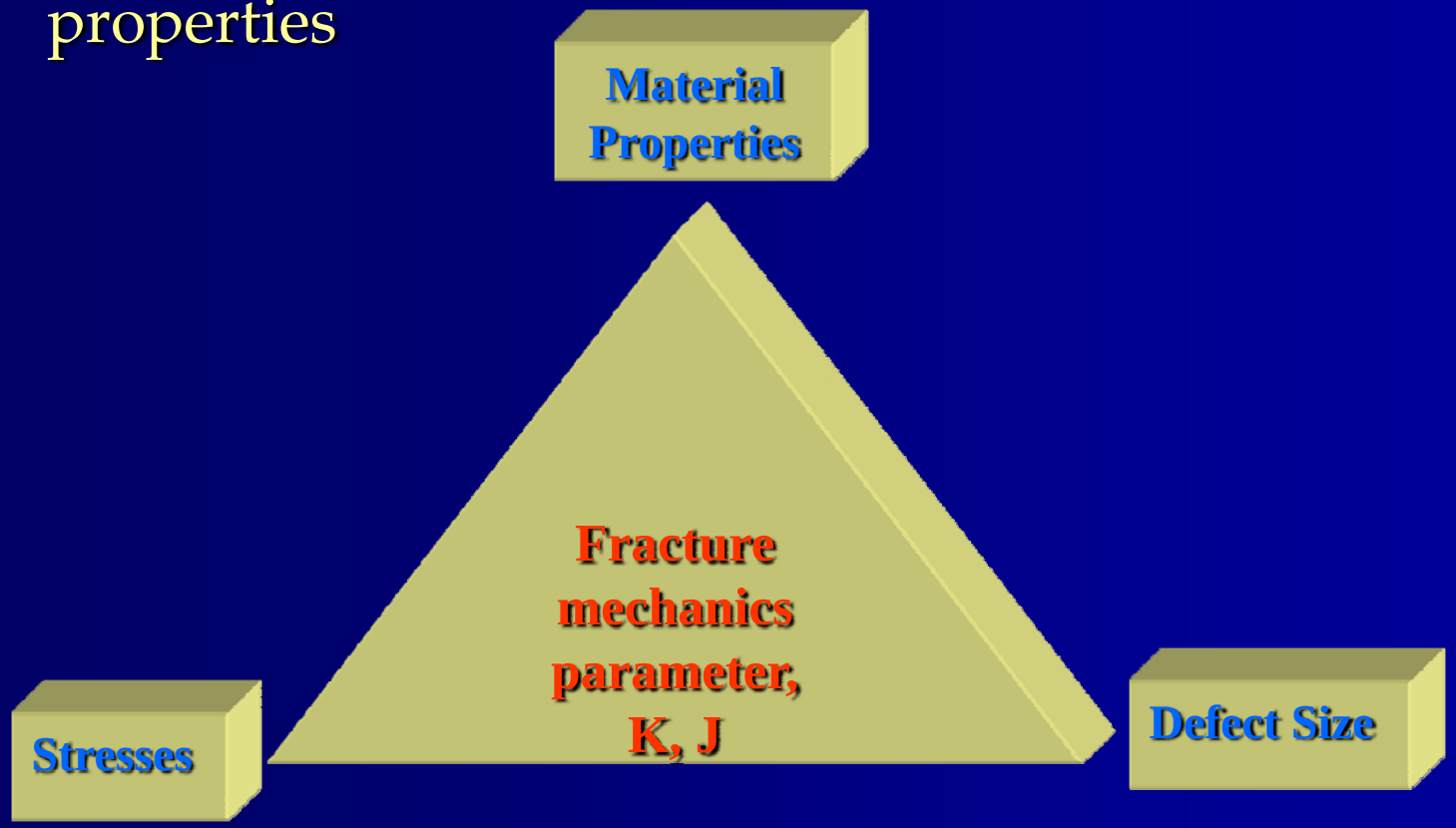

In this direction, for the safe and economic evaluation of the remaining fatigue life of existing structures, a damage accumulation based on fraction mechanics can be developed.

The FM approach has acceleration in damage increase; with increasing damage a smaller stress range contribute the damage increase.

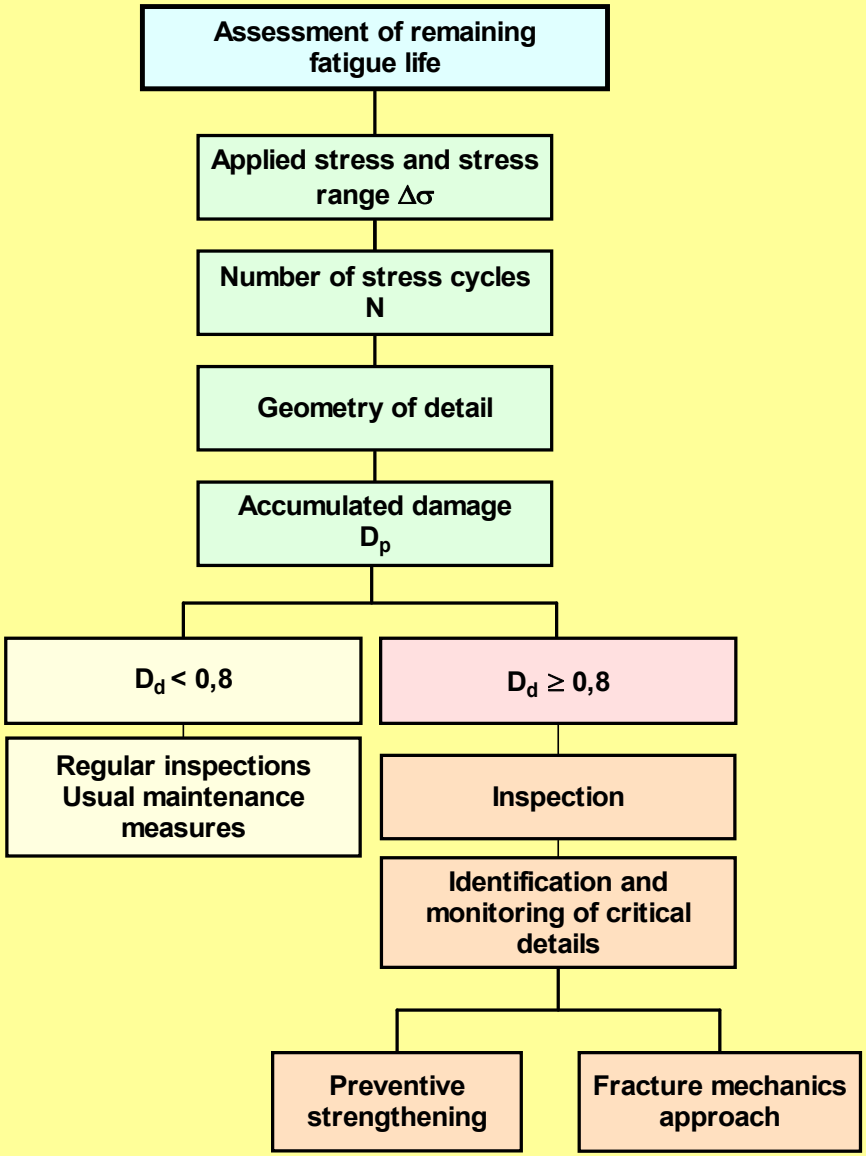
Assessment of remaining fatigue life
Applied stress and stress range Δσ
Number of stress cycles N
Geometry of detail
Accumulated damage D_p
$D_d < 0,8$
$D_d \geq 0,8$
Regular inspections Usual maintenance measures
Inspection
Identification and monitoring of critical details
Preventive strengthening
Fracture mechanics approach

Fracture Criterion

This evaluation requires the establishment of a fracture criterion for the cracked element and the adopting of maximum admissible crack dimensions.

The fracture criterion used in the present method is based on the stress intensity factor at the crack tip, marked J having the following expression:

$$J_{apl} \leq J_{Ic}$$

J_{IC} – describes the crack extension resistance, determined by samples generally;
J_{apl} – crack driving force, it can be taken from handbooks or calculated by the finite element method FEM.

If condition above is fulfilled, cracks with detectable sizes can exist without catastrophic consequences and no sudden collapse can be expected if the structure is adequately inspected.

The next step consists in the calculus of the critical crack size a_{crit}, by iteration. The difference:

$$\Delta a = a_{crit} - a_0$$

(where a_0 - is the initial crack size).

To determine this minimum service time the crack propagation time T_p is calculated by the **Paris relation**:

$$\frac{da}{dN} = K \cdot \Delta J^n$$

where: da/dN is fatigue crack rate (mm / cycle);
K and n are material characteristics experimentally determined.

When

$$T_p \geq T_{inspection}$$

no further actions are necessary.

If relation above is not fulfilled there are two possibilities:

- ⇨ to reduce the inspection intervals;
- ⇨ strengthening of the critical elements.

Another way to determinate the safety is the calculus of the number of loading cycles (N_{Tp}) in the minimum service time:

$$N_{Tp} = N_{a_{crit}} - N_{a_0}$$

BRIDGE IN SĂVÂRŞIN.

General Aspects:

The bridge in **Săvârşin** over the Mureş River on the local higway DJ 707 A →with four spans erected in 1897.

Bridge in *Săvârşin*

1897

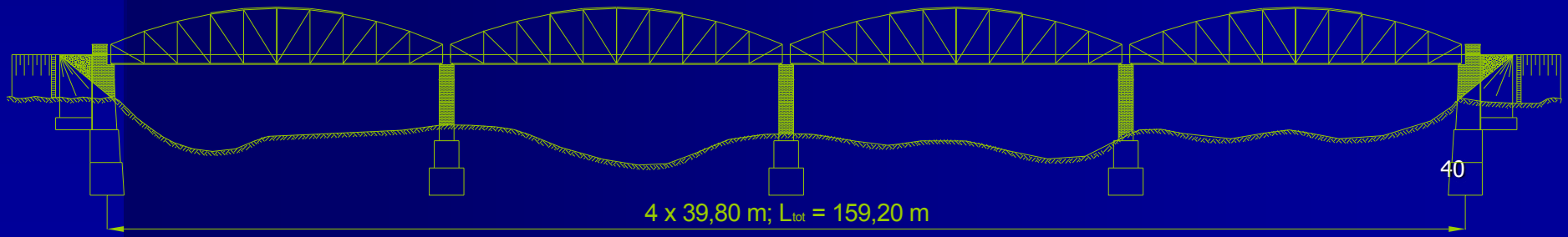

BRIDGE IN Sã VÂRŞ IN.

Verification:

For the bridge in Sâvărşin in the first step, a classical simplified analysis was performed.

The deck made by Zorres elements, filled with ballast is heavy, supporting the asphalt surface. The stresses computed in the structure for the present loads (Class E: continuous row of trucks with 30 tonnes **A 30** and a special military vehicle of 80 tonnes **V 80**) exceeded the allowable values by 10 – 40 %. Also the elements (posts) are very slender. The general stability of the compressed upper chord of the main girder was also checked.

BRIDGE IN Sã VÂRş IN.

Fatigue Verification:

SIA 161

$$\Delta\sigma_e = \alpha\Delta\sigma\left(Q_{fat}\right)$$

$$\Delta\sigma_e \leq \frac{\Delta\sigma_c}{\gamma_{fat}}$$

$$\Delta\sigma = 80\ \mathrm{N/mm^2}$$

$$\gamma_{fat} = 1{,}1$$

Case: main girder – lower chord (middle span) →

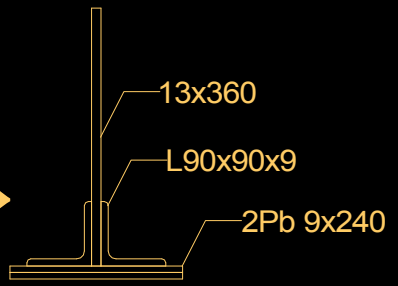

$$\Delta\sigma = 735\ \mathrm{daN/cm^2}$$

$$\alpha = 0{,}52 \text{ secondary highways}$$

$$\Delta\sigma_e = 0{,}52 \times 735 = 382\ \mathrm{daN/cm^2} < \frac{800}{1{,}1} = 727\ \mathrm{daN/cm^2}$$

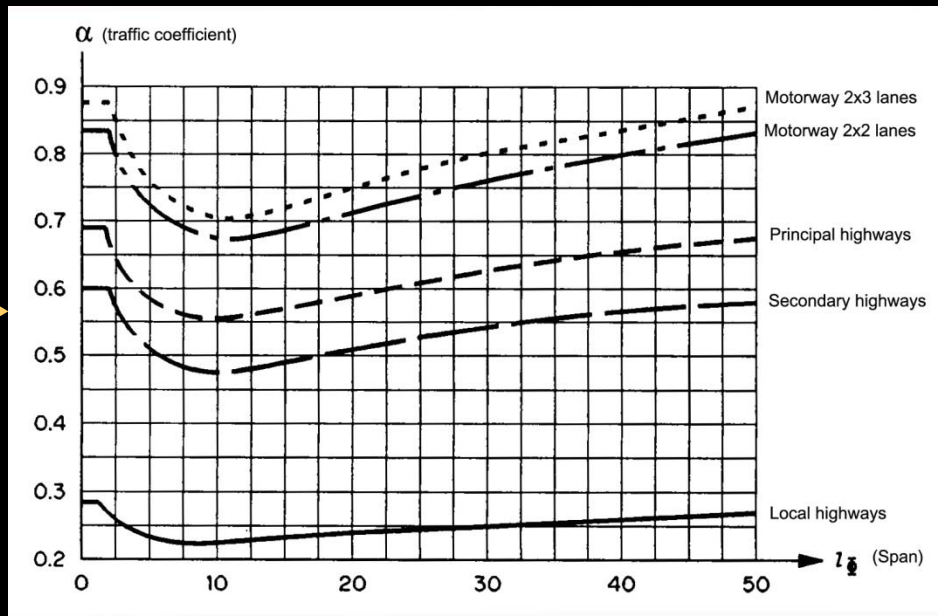

BRIDGE IN Sã VÂRȘAN:

FM Verification:

For the fracture mechanics complementary method the following steps must be taken (these are additional to the steps included by the classical method):

- the material toughness (Jlc) and crack growth tests which supplemented the conventional chemical and metallographic analysis, tensile, Charpy V notch, bending and Brinell tests);
- identification of critical details;
- size and location of defects – NDT;
- idealization of defects;
- determination of the critical crack size based on material toughness and failure assessment diagram;
- life prediction analysis.

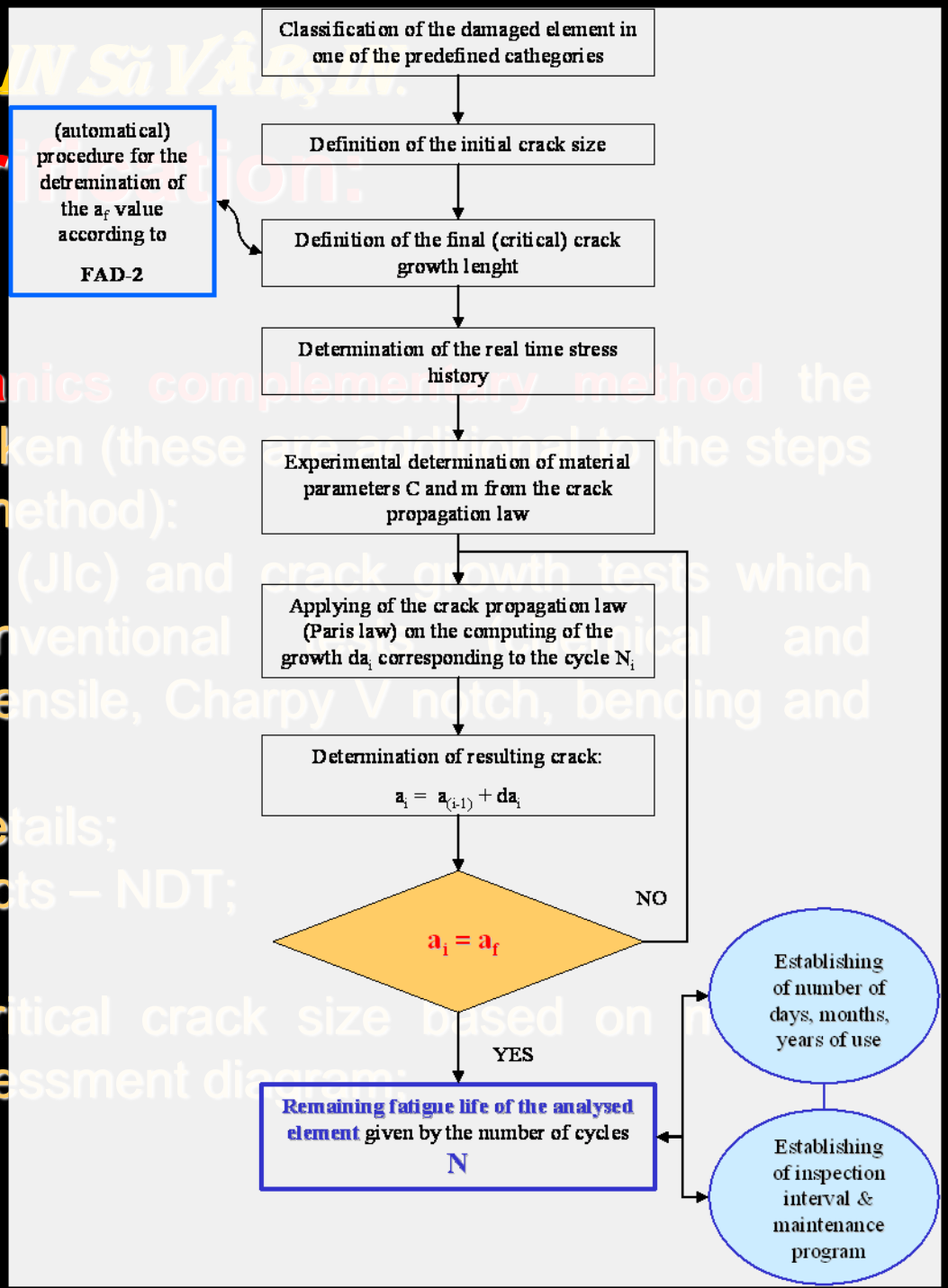

BRIDGE IN Sã VÂRş IN.

FM Verification:

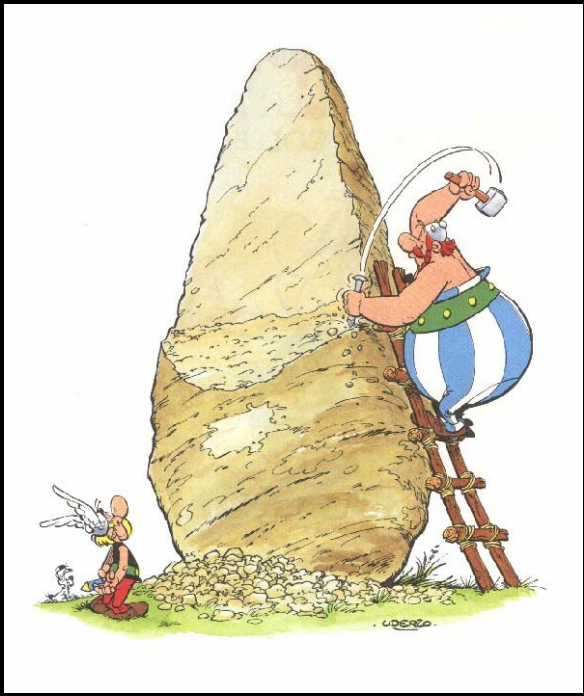

Material characteristics:

Mild Steel ≅ St34 - St37.n (STAS 500/2 – 80);

- ✓ Yield stress σ_y = 236 N/mm^2;
- ✓ Tensile stress σ_{ult} = 370 N/mm^2.
- ✓ Material toughness (min. value) J_{crit} = 15 Nmm for temperature -20°C
- ✓ Material constants for crack growth rate m = 3 şi C = 3 x 10 $^{-12}$

Propagation rate of crack dimensions under fatigue loads (BS 7910:1999) - **Paris relation**.

$$\frac{da}{dN} = C \cdot \Delta K^m$$

$$\Delta K = K_{max} - K_{min} = Y(\sigma_{max} - \sigma_{min})\sqrt{\pi a}$$

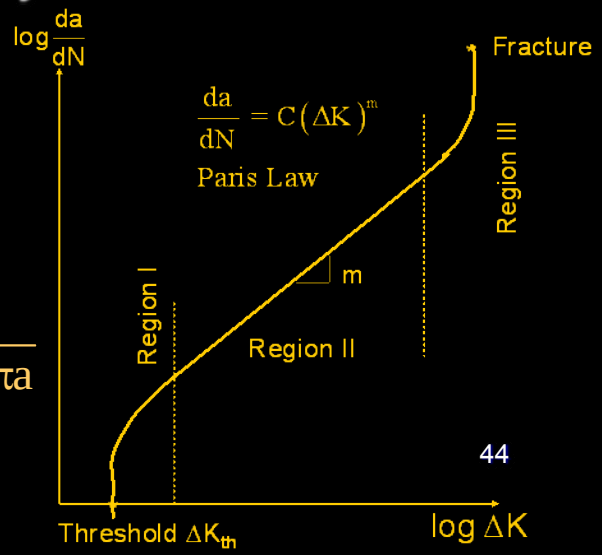

*For the old riveted steel bridges the usual incubated fatigue cracks are situated at the rivet hole or at the plate edge. A good initial fatigue crack length which can be detected at corrosion conditions is **5,0 mm**.*

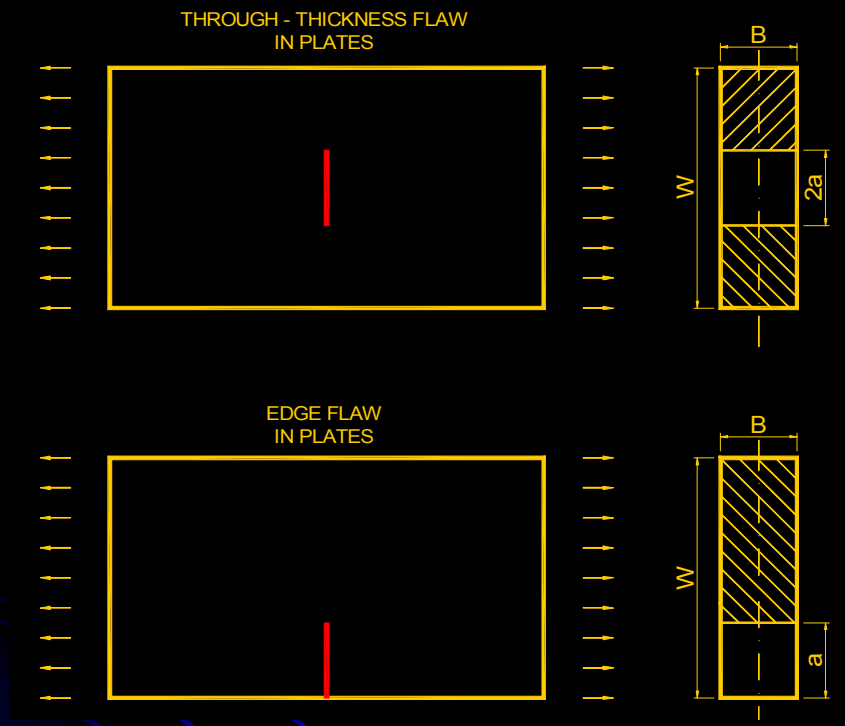

Theoretical crack models

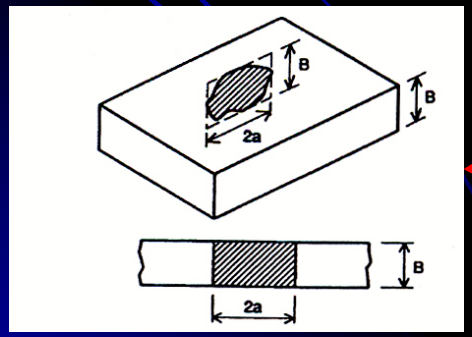

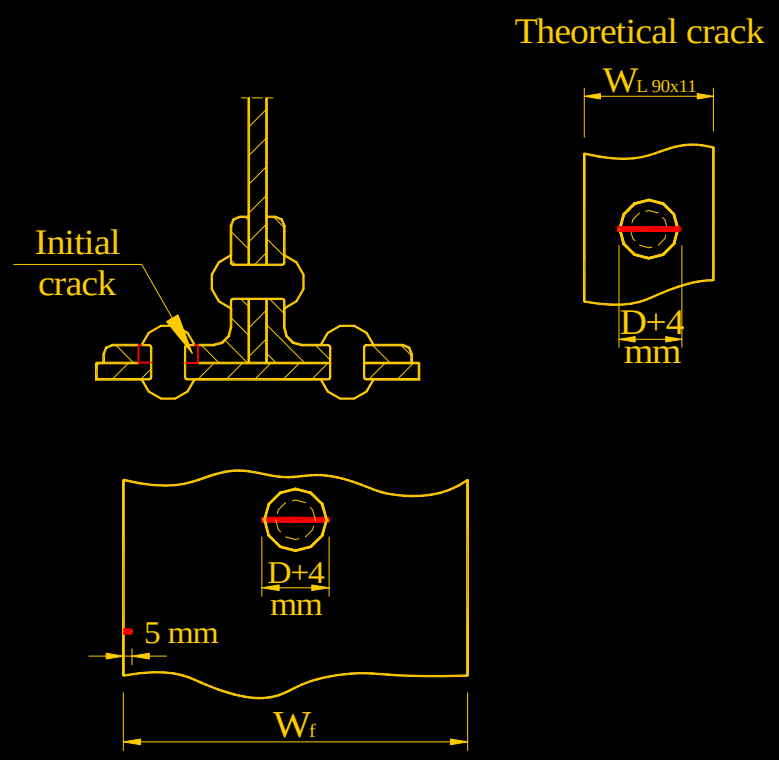

Position and initial length of the cracks

The **assessment of flaw acceptability**
→ **on failure assessment diagrams (FAD)**
→ **material toughness** is created taking into account the recommendations given by the BS 7910\1999.

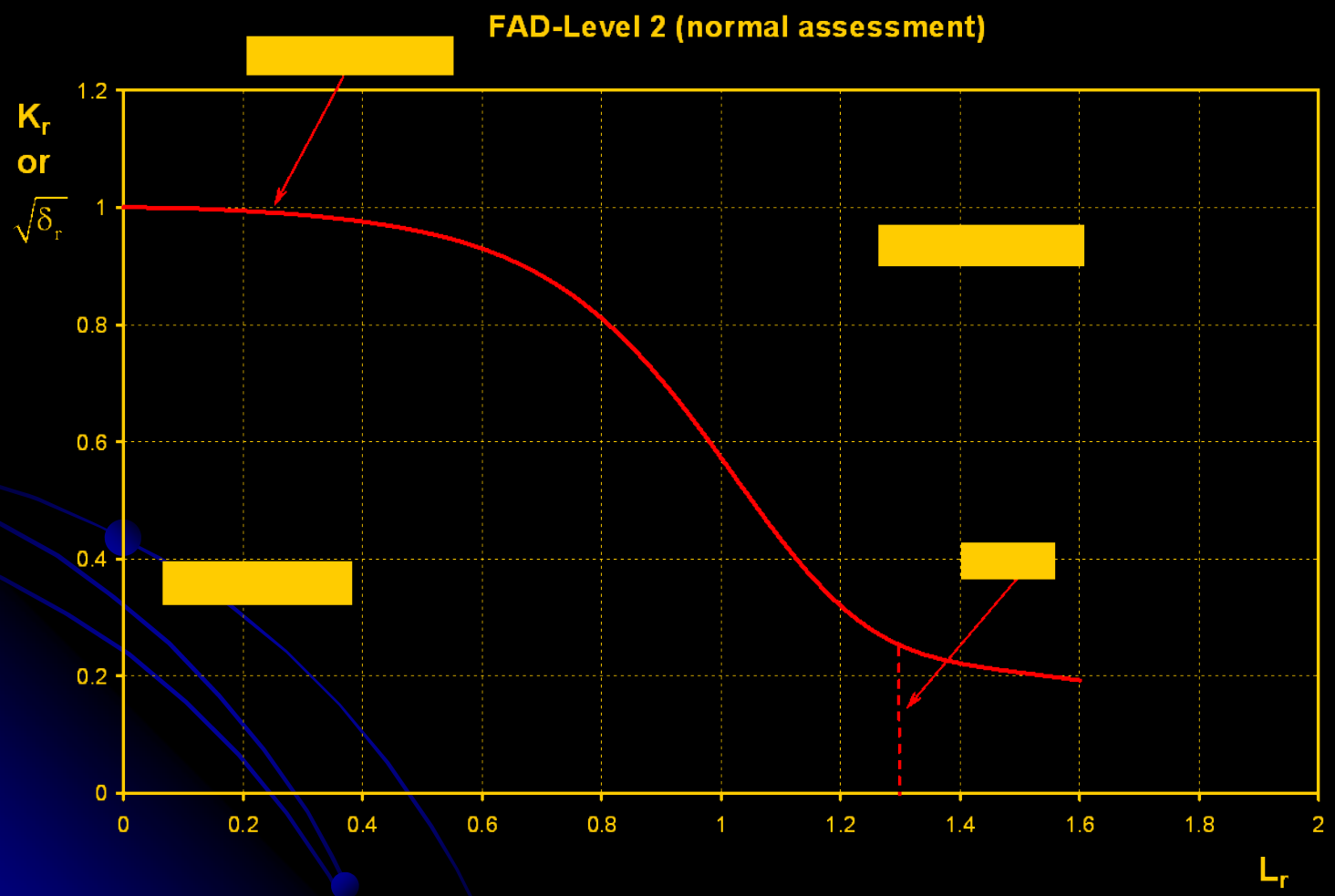

→ **a_{crit} = 36,1 mm** (for K_{Ic} = 1500 $Nmm^{-3/2}$ and $\sigma_{appl} = 118,3\ N/mm^2$)

The crack growth procedure

Integration of Paris law

$$\frac{da}{dN} = C \cdot \Delta K^m$$

$$dN = \frac{da}{C(\Delta K)^m}$$

$$N = \int_0^N dN = \int_{a_0}^{a_{crit}} \frac{da}{C \cdot \Delta K^m}$$

$$N = \int_{a_0}^{a_{crit}} \frac{da}{C \cdot \Delta\sigma^m \cdot Y^m \cdot (\pi a)^{-m/2}}$$

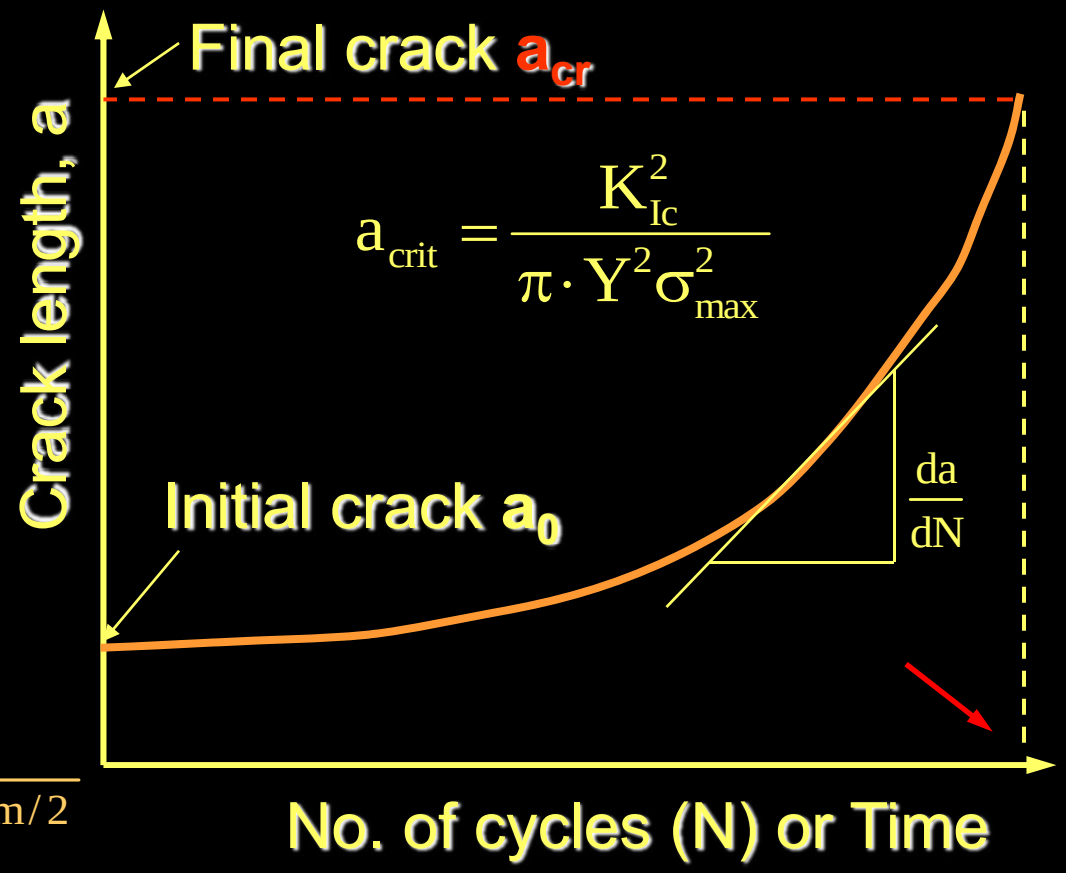

a_{cr} ⇨ remaining service life

Stress history – main girder (bridge Săvârşin)

A30	Trucks	Bus	**Total**
8	8	8	24
8	8	12	28
4	8	12	24
4	4	0	8
4	0	0	4
2	0	0	2
0	0	0	0

Ds $_e$ [daN/cm^2] = **221,57** Total/day

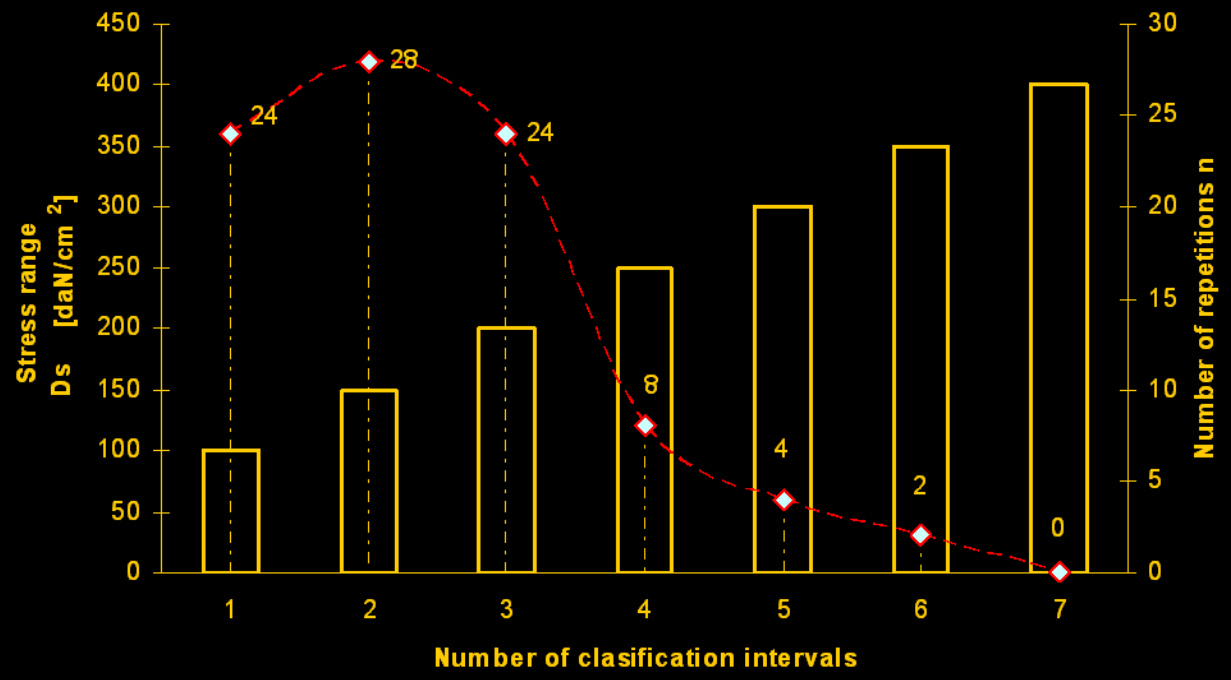

Remaining Fatigue Life

a_0 [mm]	N cycles	RFL years
5,0	4.680.000	142,47
10,0	2.460.000	74,89
15,0	1.490.000	45,36
20,0	920.000	28,01
25,0	540.000	16,44
30,0	270.000	8,22

OBS. In the existing elements fatigue cracks with a_0 = 5 …. 15 mm were detected.

Rehabilitation:

BRIDGE IN Sã VÂRş IN.

Importance of the structure
historical value → strengthening

DIRECT REINFORCEMENT

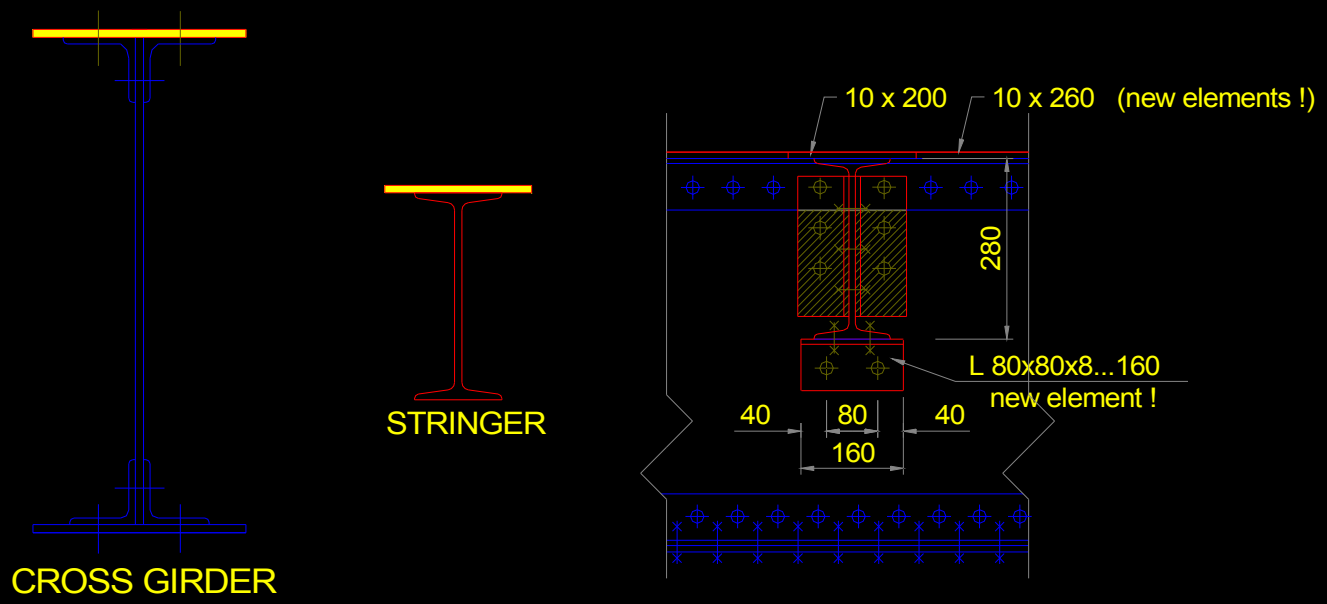

Rehabilitation:

BRIDGE IN Sã VÂRş IN.

DIRECT REINFORCEMENT

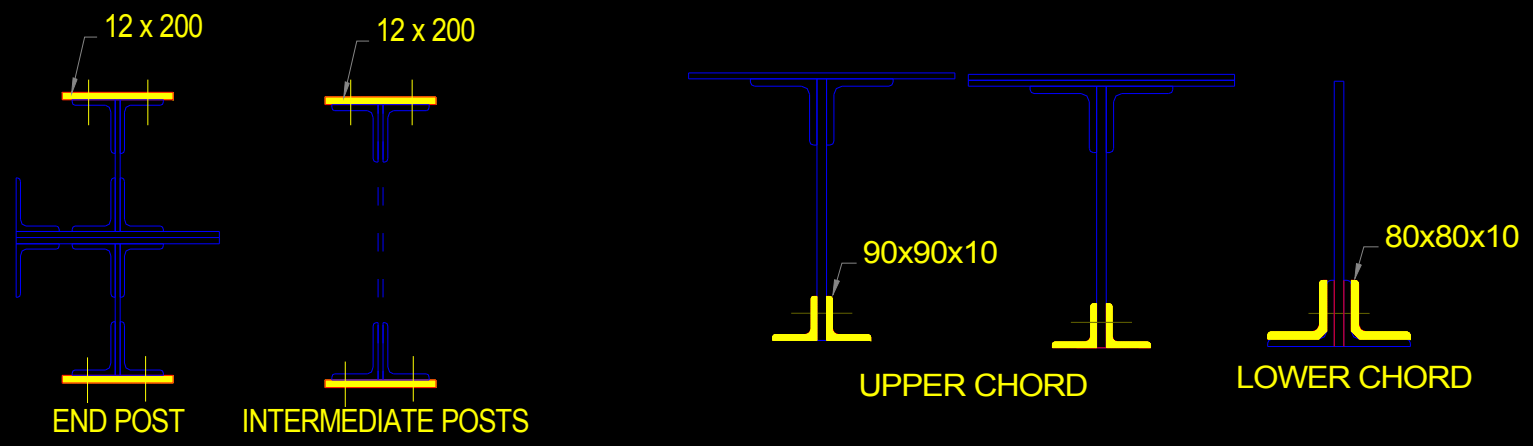

Main girder elements

Rehabilitation:

BRIDGE IN Sã VÂRş IN.

INDIRECT REINFORCEMENT

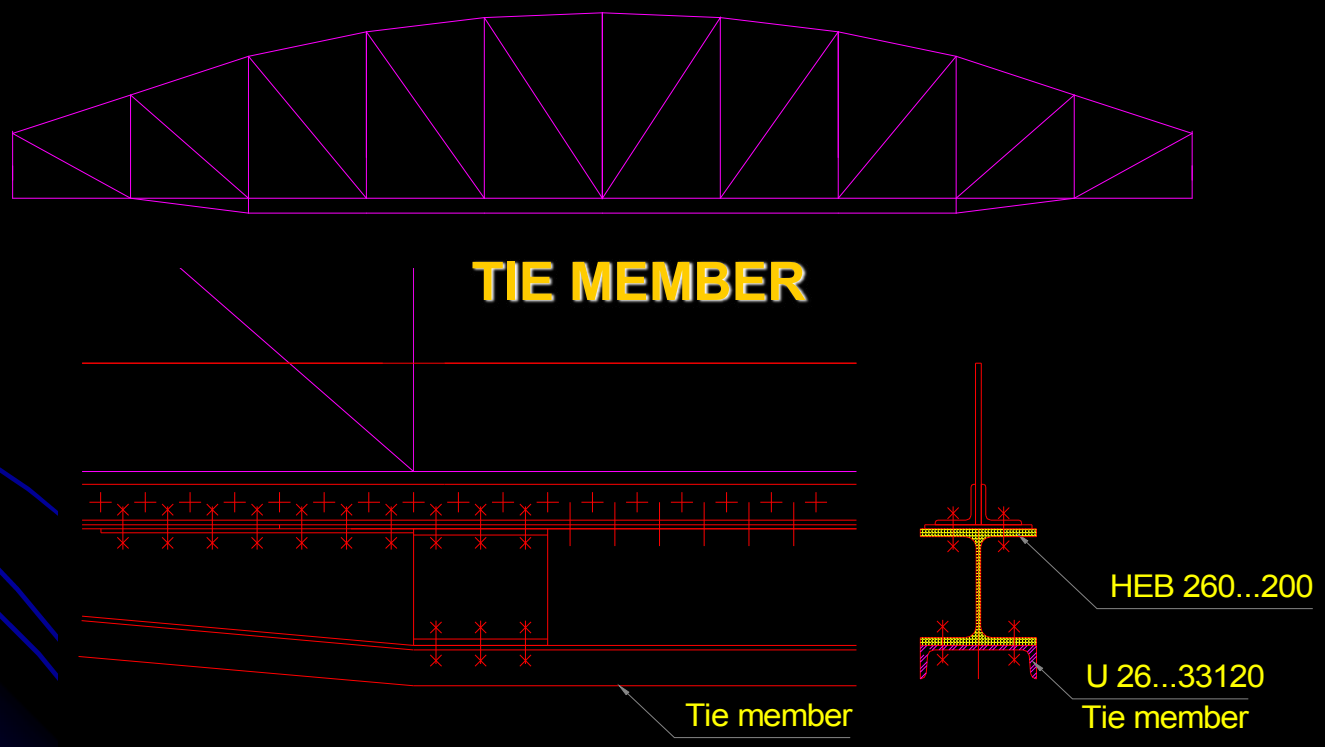

The reinforcement of the main girder with tie member

Rehabilitation:

BRIDGE IN SĂVÂRŞIN.

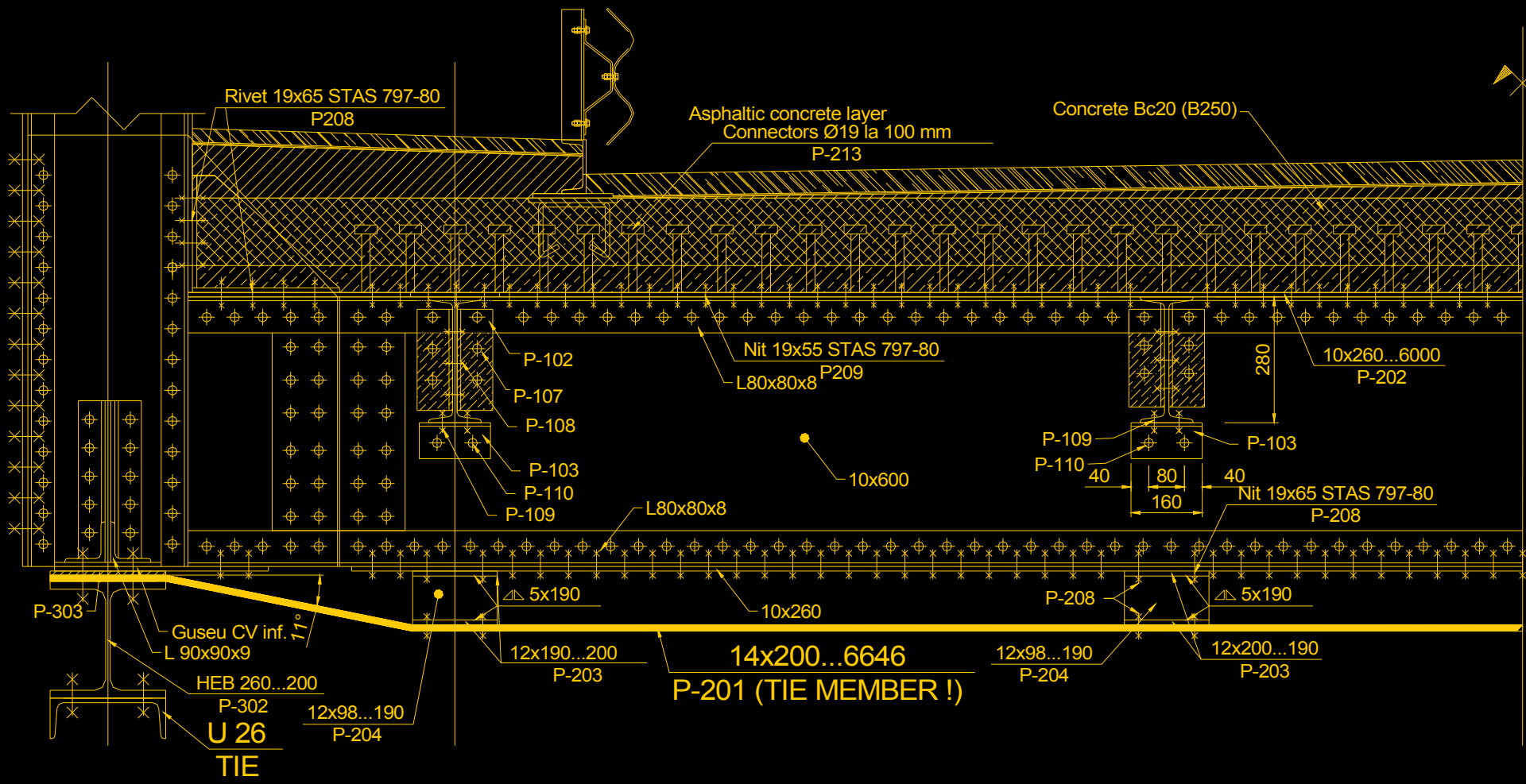

Case studies:

BRIDGE IN SăVÂRşIN.

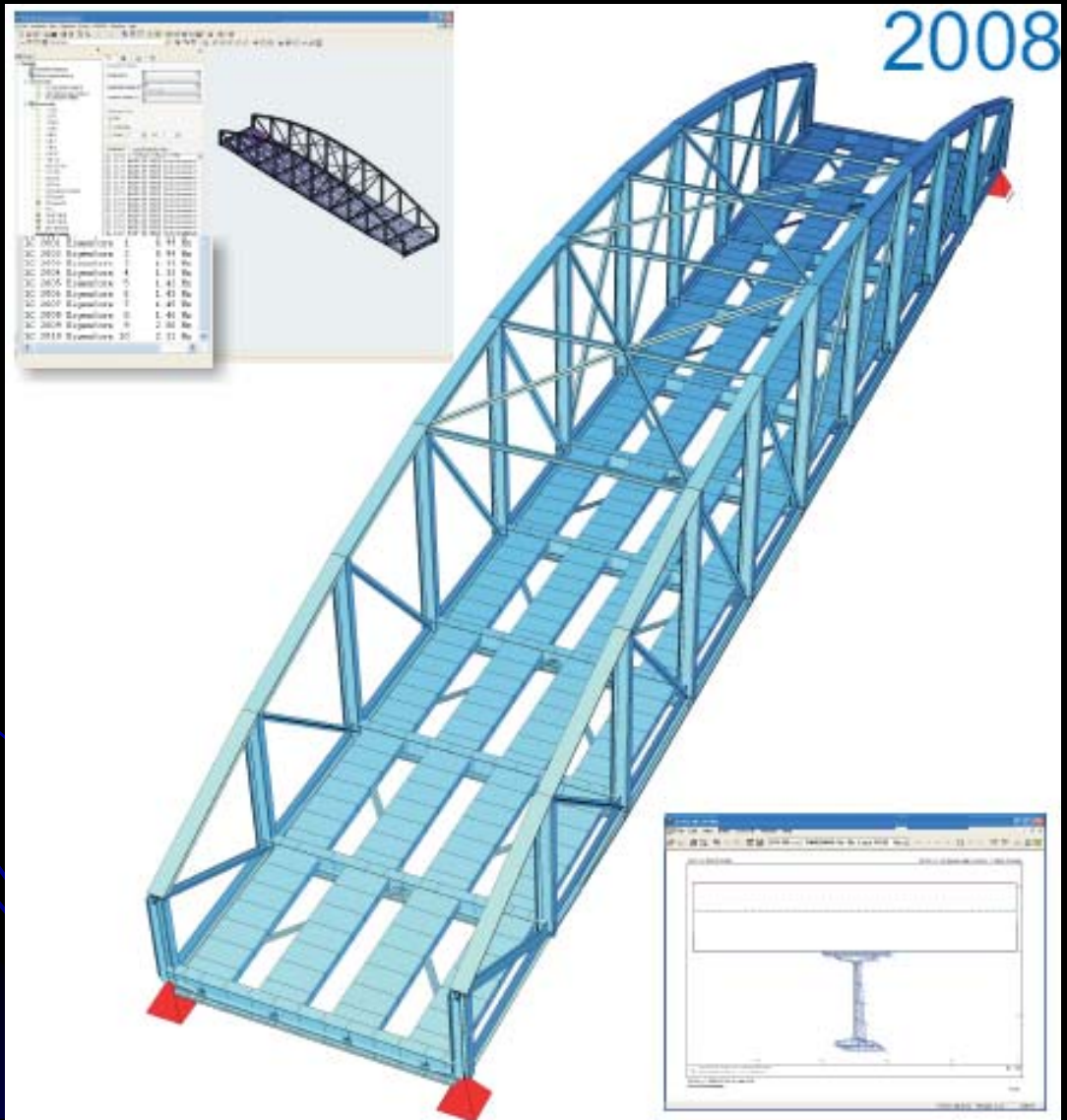

BRIDGE IN SăVÂRşIN.

In situ works:

Removing the pavement supported by Zorres profile

BRIDGE IN

In situ w

BRIDGE IN SăVÂRşIN.

In situ works:

Warm straightening of the deformed posts

BRIDGE IN SĂ VÂRŞ IN.

In situ works:

Sand blasting of the structure

BRIDGE IN Sã VÂRş IN.

In situ works:

New consolidation elements

BRIDGE IN SăVÂRşIN.

In situ works:

New consolidation elements

BRIDGE IN SĂVÂRŞIN.

In situ works:

Riveting of the new steel elements

BRIDGE IN SĂ VÂRŞ IN.

In situ works:

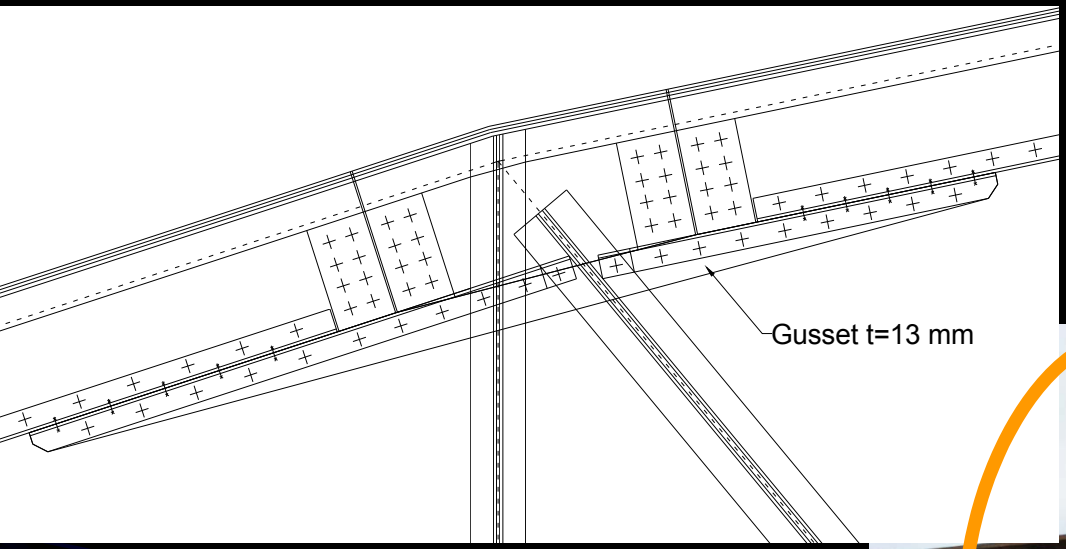

Reinforcement of upper chord joint

BRIDGE IN SăVÂRşIN.

In situ works:

Tie elements

BRIDGE IN SĂ VÂRŞ IN.

In situ works:

Stud connector welding

BRIDGE IN SăVÂRşIN.

In situ works:

Concrete deck

…new !

Old…

CONCLUSIONS

✓ The efficiency of rehabilitation (refurbishment) and the environmental implications can be shown in the following diagram:

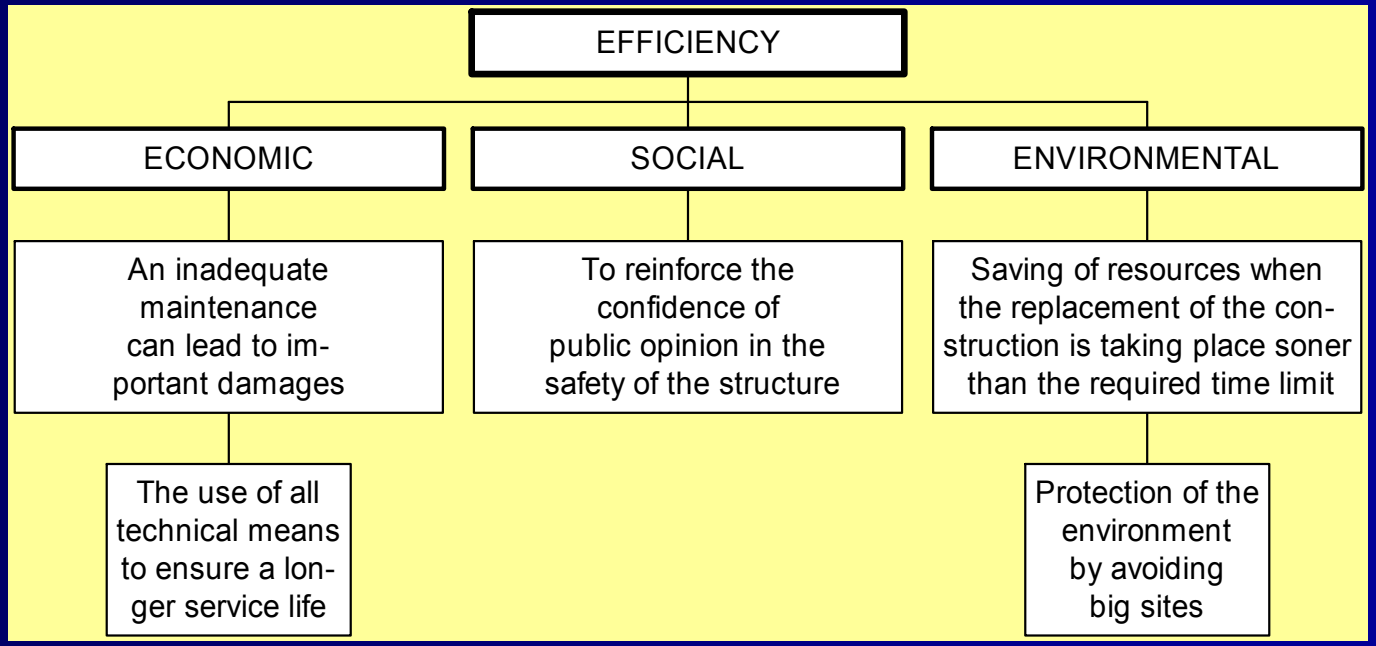

THANK YOU FOR YOUR ATTENTION !